Lucent Technologies
Bell Labs Innovations

MERLIN

Service and Maintenance Manual: Models 206, 410, and 820

518-600-012IS
Comcode 103973152
Issue 1
February 1985

MERLIN™
COMMUNICATIONS SYSTEM

SERVICE AND MAINTENANCE MANUAL:
MODELS 206, 410, AND 820

Table of Contents

	Page
Introduction	1
Functional Overview	3
Isolating and Correcting Troubles	21
A. Trouble on One Telephone	
1. Ringing	A1-1
2. Dialing	A2-1
3. Hearing	A3-1
4. Lights	A4-1
5. Features	A5-1
6. Accessories	A6-1
7. Miscellaneous	A7-1
B. Trouble on Several Telephones	
1. Ringing	B1-1
2. Dialing	B2-1
3. Hearing	B3-1
4. Lights	B4-1
5. Features	B5-1
6. Accessories	B6-1
7. Entire System Down	B7-1
8. Miscellaneous	B8-1
CIBs	
Index	

NOTE: Pages within the individual trouble sections are numbered in an unusual way to make this manual easy to update. In page number A1-4, for instance, the A indicates the section--"A. Trouble on One Telephone." The 1 indicates the first trouble category within that section--Ringing. The 4 indicates the fourth page of ringing symptoms.

Refer to the letters and numbers on the tab dividers for help in finding page numbers listed in the index.

Introduction

Even the magic of the MERLIN™ communications system sometimes fails. The problem may be a user error, installation problem, or faulty component. Usually you can correct the problem on the spot without returning any equipment for maintenance exchange.

The *Service and Maintenance Manual: Models 206, 410, and 820* is intended for use by both the customer and the service technicians. This troubleshooting manual is divided into four parts:

- **Functional Overview** describes each communications system component and its use.
- **Isolating and Correcting Troubles** includes step-by-step procedures to help you isolate a problem to a user error or a specific component. Most procedures require no tools. A few procedures require a screwdriver or a basic Touch-Tone or rotary telephone (a Power Failure Transfer Telephone will work).
- **CIBs** includes copies of customer instruction booklets shipped with the components. The CIBs describe the functional features and installation of each component.
- **Index** lists problems, features, and components. It will help you find the information you need quickly.

Functional Overview

This section describes the components of the MERLIN communications system and explains how they fit together in a typical installation. Normally, MERLIN system installations will include most of the major components shown on page 4.

Additional equipment may be attached to the MERLIN system to provide expanded features and services. See pages 15 to 19 for information about optional voice terminal accessories and control unit accessories.

Further information on many of the components (including installation instructions) is available in the customer instruction booklets (CIBs) included under the CIB tab divider. The CIB number for each component appears near its illustration. When more than one CIB is listed, the appropriate title also appears.

MAJOR SYSTEM COMPONENTS

1. **Control unit:** The control unit is the heart of the MERLIN system. It provides the power and intelligence for all voice terminals as well as the connection between voice terminals and outside lines. Program memory for the MERLIN system resides in the control unit. The model number of the control unit determines its capacity:
   - Model 206 control unit has a capacity of 2 outside lines and 6 voice terminals.
   - Model 410 control unit has a capacity of 4 outside lines and 10 voice terminals.
   - Model 820 control unit has a capacity of 8 outside lines and 20 voice terminals.

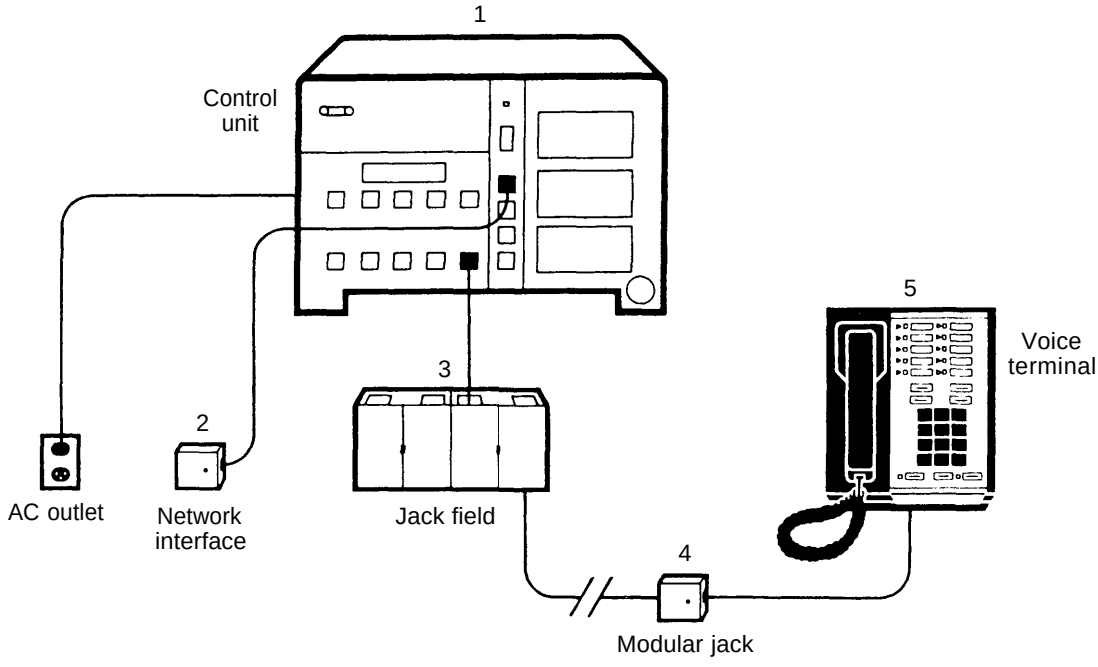

System Overview

2. **Network interface:** The network interface connects the control unit and the outside lines. The two most common network interfaces are the one-line (RJ11) and two-line (RJ14) interfaces. However, other network interfaces may be used (see the *Installation Guide: Models 206 and 410* and the *Installation Guide: Model 820).*

3. **Jack field:** The jack field provides the connections between the control unit and the wiring to the voice terminals. The jack field may consist of either jack panel boxes or modular jacks mounted near the control unit. (However, in some systems, the voice terminals plug directly into the control unit using modular voice terminal cords and extension cords.) Optional attachments (extra alerts, paging systems, etc.) may also connect to the control unit through the jack field.

4. **Modular jack:** Each voice terminal wiring run from the jack field terminates in a modular jack at the voice terminal location. Every voice terminal has a separate modular jack.

5. **Voice terminal** (MERLIN **system telephone):** The voice terminal provides basic telephone functions as well as access to the advanced feature software residing in the control unit.

   MERLIN system voice terminals may be installed in a near-by building by using Outdoor Wiring Protection Units. Contact your equipment supplier for more information.

   Basic Touch-Tone and rotary telephones may also be used as off-premises telephones with the MERLIN system using the optional Off-Premises Telephone Interface to connect them. In that case, off-premises telephones access system features by means of dial codes.

The following pages describe in detail the control units (by model), optional cartridges and line/voice terminal modules, voice terminals, and accessories.

CONTROL UNIT

The control unit provides power for most voice terminals and accessories. All outside lines and all voice terminals and telephones connect to the control unit, which contains the microprocessor and memory for all the advanced features available with the MERLIN communications system.

NOTE: Page 7 explains in greater detail the physical features of the Models 206 and 410 control units. Since they are the same except for the number of outside line jacks and the number of voice terminal jacks (Model 206 control unit has 2 outside line jacks and 6 voice terminal jacks; Model 410 has 4 outside line jacks and 10 voice terminal jacks), only Model 410 is pictured on page 7.

Model 206 Control Unit

Behind the removable front panel of the Model 206 control unit are 6 jacks for voice terminals labeled 0 through 5, and 2 jacks for outside lines labeled A and B. On the right side are horizontal slots for the three types of cartridges available to expand the MERLIN system's capabilities.

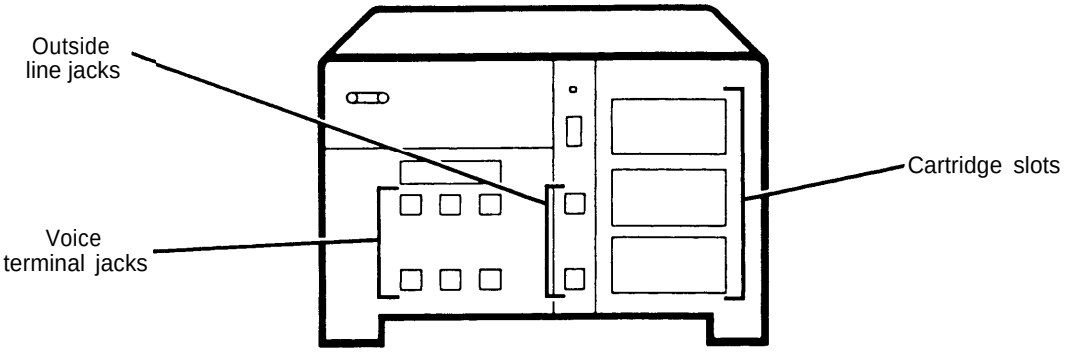

Model 410 Control Unit

Behind the removable front panel of the Model 410 control unit are 10 jacks for voice terminals labeled 10 through 19, and 4 jacks for outside lines labeled A through D. The Model 410 control unit has horizontal slots on the right side for the three types of cartridges available to expand the MERLIN system's capabilities.

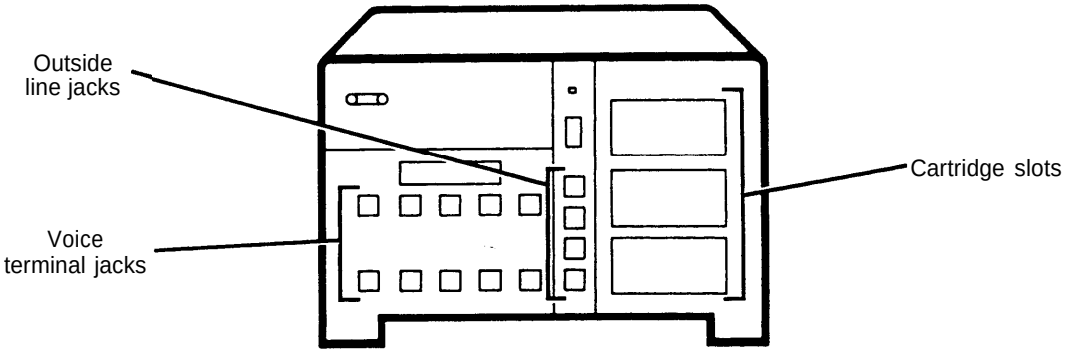

Physical Features of the Model 206 and 410 Control Units (Model 410 is pictured)

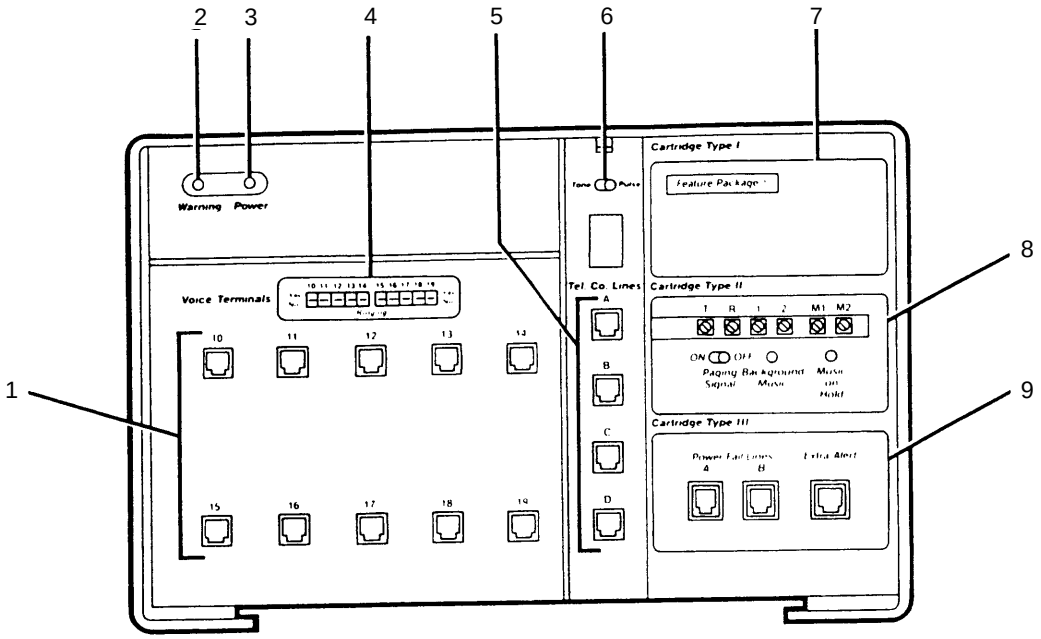

1. **Voice Terminals jacks:** Jacks labeled 0 through 5 (Model 206) or 10 through 19 (Model 410) accommodate MERLIN system voice terminals.
2. **Warning light (red):** Comes on momentarily when the ac power cord is first plugged in. If the warning light remains on, it can also indicate trouble.
3. **Power light (green):** Remains on to indicate that the ac cord is plugged in.
4. **Option switches:** For systems with standard features, set the switches labeled Ringing to *Yes* to alert users of incoming calls or *No* so users are not alerted. With Feature Package 1, an Outward Calls label is placed over the Ringing label. In this case, the switches are set to *Yes* if the user can make outside calls, and to *No* if the user cannot. With Feature Package 2, an Admin/Normal-Toll Prefix/Area Code label is placed over the Ringing label. When the system is administered, the Admin/Normal switch is set to *Admin.* The Toll Prefix/Area Code switch sets the system to expect a prefix “1” or “0” before the area code on long-distance calls, or just the area code alone.
5. **Tel. Co. Lines jacks:** Jacks labeled A and B (Model 206) or A through D (Model 410) provide connections for outside lines.
6. **Tone/Pulse switch:** Set to *Tone* for Touch-Tone service, and set to *Pulse* for rotary (dial pulse) service.
7. **Cartridge Type I slot:** Accommodates feature packages that offer custom features (for more information see page 10). Without a feature package the system has standard features, as described in the standard features user’s guide.
8. **Cartridge Type II slot:** Accommodates cartridges that provide the system with audio options such as connections for Music-on-Hold and paging systems (for more information see page 11).
9. **Cartridge Type III slot:** Accommodates cartridges that give the system line-associated options such as connections for Extra Alert Horns and Power Failure Transfer Telephones (for more information see page 12).

Model 820 Control Unit

Behind the removable front panel of the Model 820 control unit is one line/voice terminal module that accommodates 2 outside lines and 5 voice terminals. The Model 820 control unit can accommodate up to four line/voice terminal modules for a maximum of 8 outside line jacks and 20 voice terminal jacks (for more information on available types of modules, see page 12). Positions reserved for additional modules have protective plastic covers. Model 820 has three horizontal slots on the right side for the cartridges available to expand the MERLIN system's capabilities.

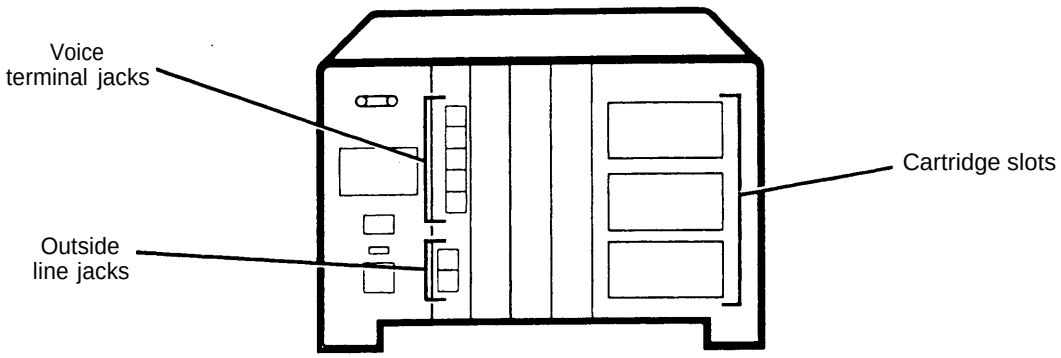

Physical Features of the Model 820 Control Unit

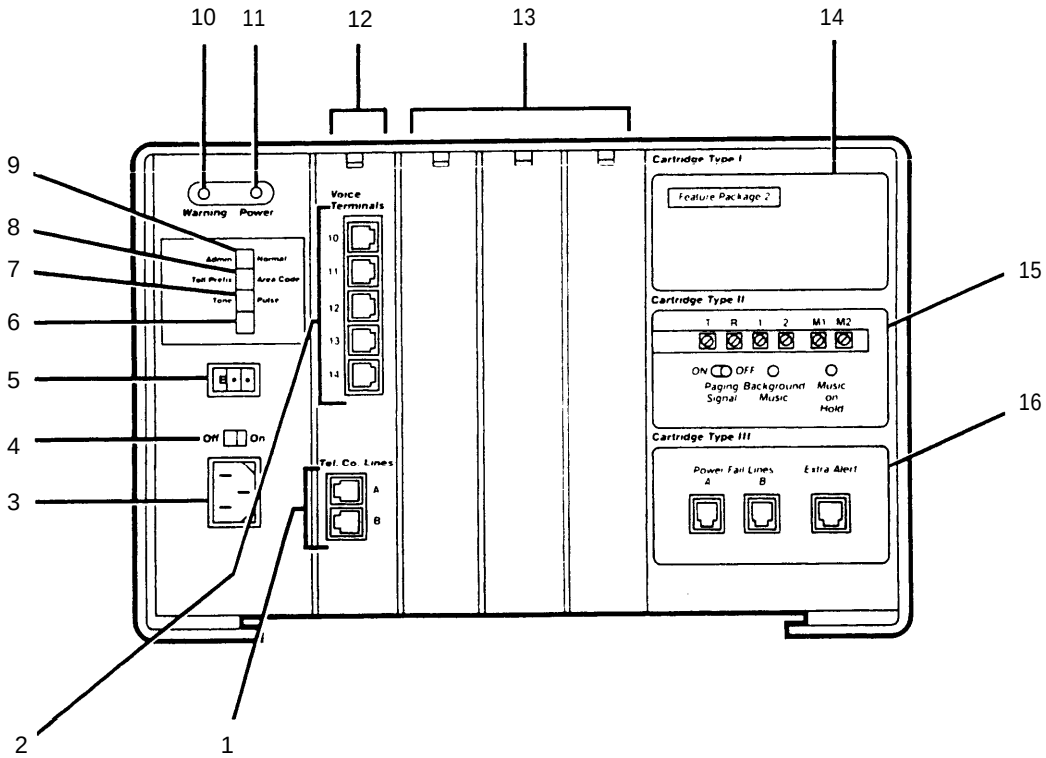

1. **Tel. Co. Lines jacks:** Jacks labeled A and B on the 2-Line/5-Voice Terminal Module shipped with the control unit provide connections for outside lines.
2. **Voice Terminals jacks:** Jacks labeled 10 through 14 on the 2-Line/5-Voice Terminal Module shipped with the control unit provide connections for MERLIN system voice terminals.
3. **AC power cord connector**
4. **On/Off power switch**
5. **Auxiliary Power Unit connector:** Connects Auxiliary Power Unit needed for systems with many accessories or 34-button deluxe voice terminals.
6. Switch not used.
7. **Tone/Pulse switch:** Set to *Tone* for Touch-Tone service, and set to *Pulse* for rotary service with standard features and Feature Package 1.
8. **Toll Prefix/Area Code switch:** This switch is not used with standard features, or Feature Package 1. For Feature Package 2, set to *Toll Prefix* if long distance calls are made using the prefix “0” or “1,” otherwise, set to *Area Code.*
9. **Admin/Normal switch:** This switch is not used with standard features, or Feature Package 1. With Feature Package 2, set to *Admin* whenever the control unit is customized or administered, and to *Normal* for normal operation. However, the switch can be set permanently to *Admin* without damage to the system. Setting it to *Normal* simply prevents accidental system changes.
10. **Warning light (red):** Comes on momentarily when the ac power cord is first plugged in. If the warning light remains on, it can also indicate trouble.
11. **Power light (green):** Remains on to indicate the ac cord is plugged in and the On/Off switch is set to On.
12. **2-Line/5-Voice Terminal Module:** One module is shipped with control unit. It accommodates five voice terminals and two outside lines. Up to four modules can be used for a total of 8 lines and 20 voice terminals (for more information see page 12).
13. **Additional modules:** Positions reserved for additional line/voice terminal modules have plastic covers. (Page 12 describes the three types of line/voice terminal modules that can be added.)
14. **Cartridge Type I slot:** Accommodates feature packages that offer custom features (for more information see page 10). Without a feature package the system has standard features, as described in the standard features user’s guide.
15. **Cartridge Type II slot:** Accommodates cartridges that provide the system with audio options such as connections for Music-on-Hold and paging systems (for more information see page 11).
16. **Cartridge Type III slot:** Accommodates cartridges that give the system line-associated options such as connections for Extra Alert Horns and Power Failure Transfer Telephones (for more information see page 12).

TYPE I CARTRIDGES: FEATURE PACKAGES

A Type I cartridge occupies the top slot on the right side of the control unit. This cartridge contains all the programming for the custom features of the MERLIN system. (Without this cartridge, the system has standard features only.) The individual voice terminal has no memory or programming capabilities itself. A voice terminal, when connected to the MERLIN system, can be programmed to perform specific functions. However, the actual program instructions are stored in the cartridge, not in the voice terminal. The cartridge may come with a label that fits over the standard features or Ringing switches label. For example, Feature Package 1 (Models 206 and 410 only) comes with the label Outward Calls.

For more specific information regarding the features provided by Type I cartridges, refer to the administration manuals and user's guides for Models 206, 410, and 820 that accompany the cartridges.

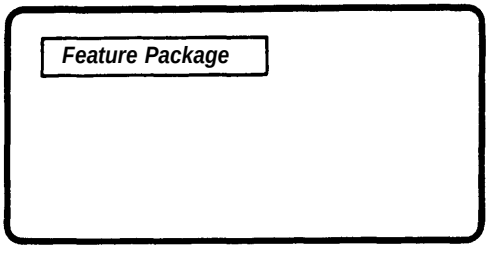

CIB 2869

TYPE II CARTRIDGES: AUDIO OPTIONS

A Type II cartridge provides connections for such features as Loudspeaker Paging, Background Music, and Music-on-Hold. It is installed in the second slot on the right side of the control unit.

Pictured below is the Music-on-Hold/Paging Cartridge. A Music-on-Hold Type II cartridge with only the Music-on-Hold feature is also available; this cartridge has only the M1 and M2 terminals and the Music-on-Hold volume control.

M1 and M2 terminals: Connect to a music source to provide Music-on-Hold and, if desired, background music on the paging system.

1 and 2 terminals: Connect to the paging system to signal when a page is in progress (for example, to turn off the background music).

T and R terminals: Connect to the telephone input on your paging system. The connection allows users to access the paging system via the intercom from any voice terminal.

Paging Signal On/Off switch: When set to *On,* a tone precedes all paging announcements. When set to *Off,* no tone precedes the paging announcement.

Background Music volume control: Used to adjust the volume of background music. Turning it clockwise increases the volume and turning it counterclockwise decreases the volume.

Music-on-Hold volume control: Used to adjust the volume of Music-on-Hold. Turning it clockwise increases the volume and turning it counterclockwise decreases the volume.

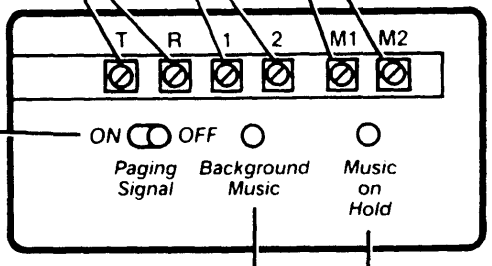

CIB 2870: Music-on-Hold Cartridge Type II

CIB 2871: Music-on-Hold/Paging Cartridge Type II

TYPE III CARTRIDGES: LINE-ASSOCIATED OPTIONS

A Type III cartridge provides line-associated options. It is installed in the third or last slot on the right side of the control unit. Pictured below is the Extra Alert/2-Line Power Transfer Type III cartridge.

Power Fail Lines jacks: Connect two basic Touch-Tone or rotary telephones for automatic backup service in the event of a commercial power failure.

Extra Alert jack: Connects a loud bell or horn for noisy or remote locations.

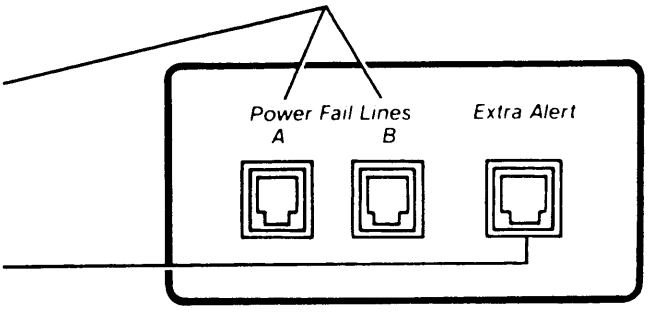

CIB 2872: Extra Alert/2-Line Power Failure Cartridge Type III

LINE/VOICE TERMINAL MODULES (Model 820 only)

The three types of modules that can expand the capacity of the Model 820 control unit are shown below. One 2-Line/5-Voice Terminal Module which has voice terminal jacks labeled 10 through 14 and outside line jacks labeled A and B comes with each Model 820 control unit. Up to four modules in any combination can occupy the vertical slots in the center of the control unit.

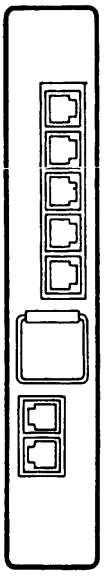

2-Line/5-Voice Terminal Module: Adds two outside lines and five voice terminals.

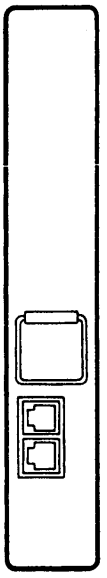

2-Line Module: Adds two outside lines, but no voice terminals.

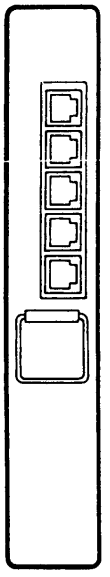

5-Voice Terminal Module: Adds five voice terminals, but no outside lines.

CIB 3002: 2-Line/5-Voice Terminal Expansion Module for Model 820

CIB 3012: 5-Voice Terminal Expansion Module for Model 820

CIB 3027: 2-Line Module for Model 820

OFF-PREMISES TELEPHONE INTERFACE TYPE C (Optional)

The Off-Premises Telephone Interface is optional. This unit connects off-premises telephones to the MERLIN communications system, making the advanced features available to the off-premises user. The unit can be mounted on the wall or placed near the control unit. Power is supplied directly through the voice terminal module jack connection described below. There must be a Type I cartridge in the control unit for this interface to operate.

To Voice Terminal Module jack: Connection via a 4-pair cord is made from this jack to a voice terminal jack in the control unit. The intercom number of the off-premises telephone is determined by the voice terminal jack to which this unit is connected:

Off-Premises Line Input jack: Off-premises outside line connects via 2-pair wire directly to this input.

Power light: Remains on when power is on.

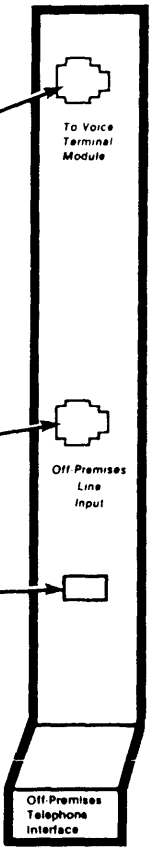

CIB 3009

VOICE TERMINALS

Several types of voice terminals may be connected to Models 206, 410, and 820. They are distinguished from one another by the number of silver membrane buttons above and to the right of the dial pad. These buttons give access to lines and features; most buttons are programmable. The operation of each voice terminal can be customized by programming different features to these buttons. (The individual voice terminal has no memory or programming capabilities by itself, however. Actual program instructions are stored in the Type I cartridge of the control unit.) Refer to the administration manual and user's guides for Models 206, 410, and 820 for more information about individual voice terminals if you have a Type I cartridge. The illustration below shows examples of available voice terminals.

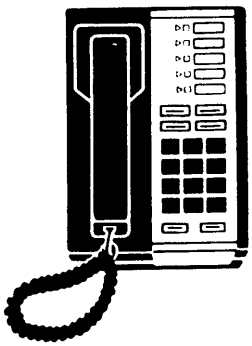

5-Button Voice Terminal

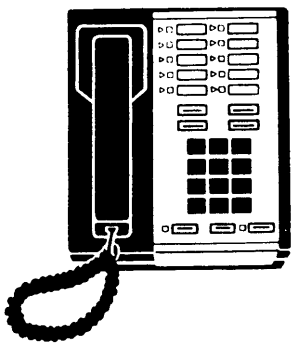

10-Button Voice Terminal

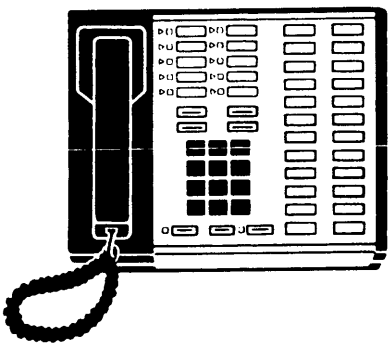

34-Button Voice Terminal

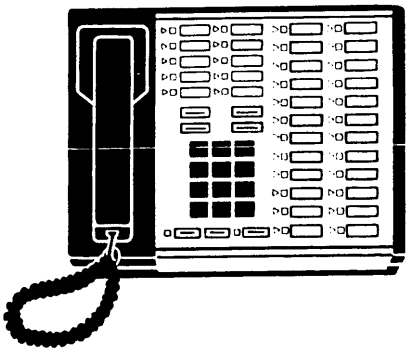

34-Button Deluxe Voice Terminal

OPTIONAL EQUIPMENT

In addition to the essential components of the MERLIN communications system, several different accessories may be connected to voice terminals or the control unit.

Optional Voice Terminal Accessories

Hands-Free Units, Headset Adapters, and Manual Multipurpose Adapters can be connected directly to the underside of the voice terminal as illustrated below. An externally connected Voice Terminal Power Supply can also be added.

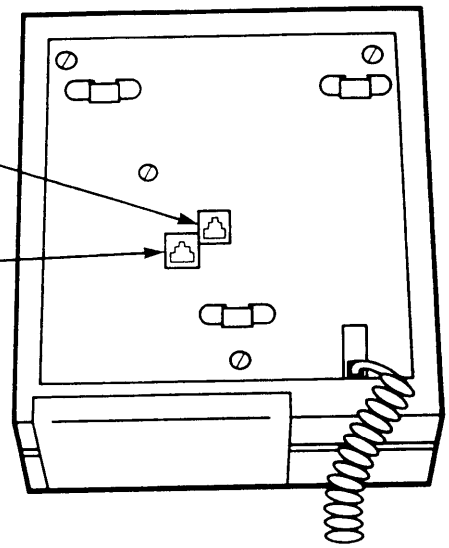

Hands-Free Unit (HFU)

The Hands-Free Unit provides speakerphone capability; making it possible to place and receive outside and intercom calls without using the voice terminal handset. The HFU, shown below, can be used with 10-button or 34-button voice terminals.

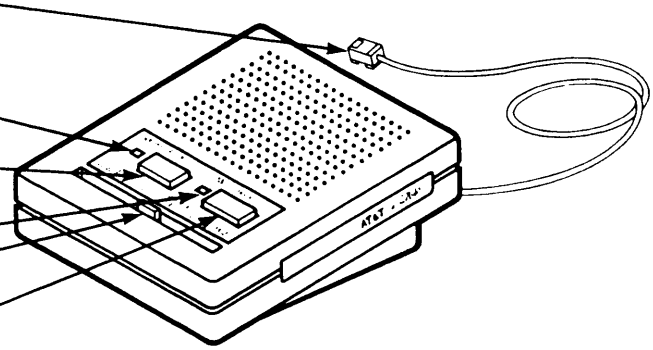

CIB 2864

Headset Adapter

The Headset Adapter makes it possible to use a headset with a 10-button or 34-button voice terminal.

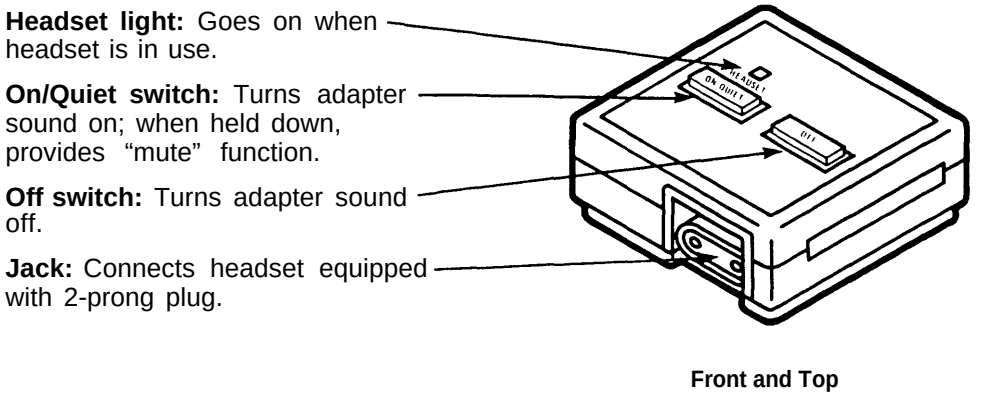

Front and Top

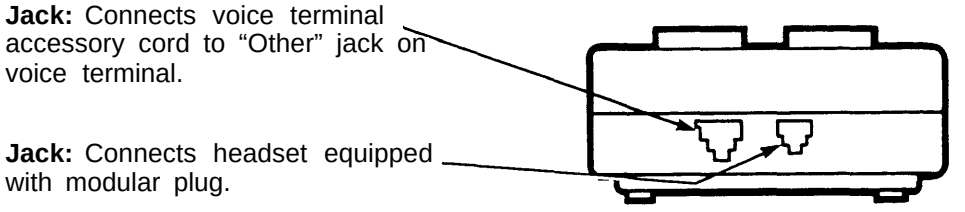

Back

CIB 2867

Voice Terminal Power Supply (Model 820 only)

A Voice Terminal Power Supply provides extra power to 34-button deluxe voice terminals and attendant consoles. The power supply plugs into an ac outlet not controlled by a switch. A cord (included with the power supply) connects it to one jack of a 2-jack adapter (also included). The modular terminal cord from the voice terminal plugs into the other jack on the adapter. The adapter has a plug end that connects to a modular jack mounted near the voice terminal.

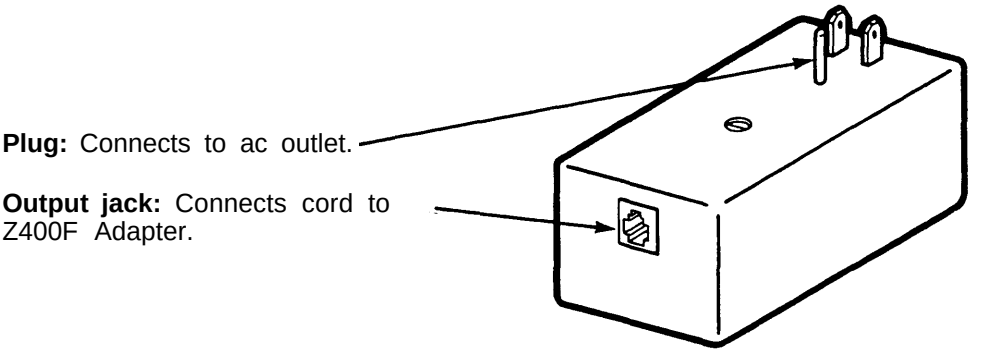

CIB 3007

Manual Multipurpose Adapter

The Manual Multipurpose Adapter (illustrated below) permits these devices to be connected to a voice terminal:

- Modems and data terminals with built-in modems. (An extra telephone is not needed with an AT&T 212A-type modem with a special cable. Automatic answering modems cannot be used.)
- Basic Touch-Tone or rotary telephones.
- Speakerphones and conference phones.
- Touch-Tone automatic dialers.
- Cordless telephones.
- Facsimile machines.

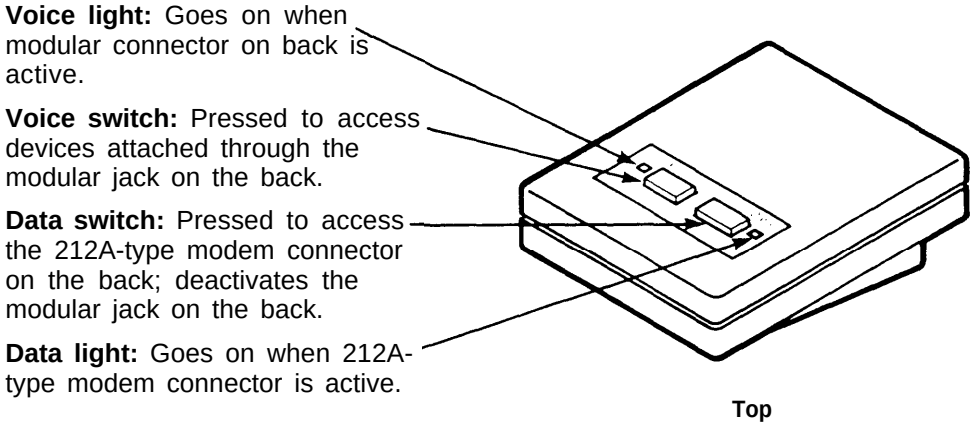

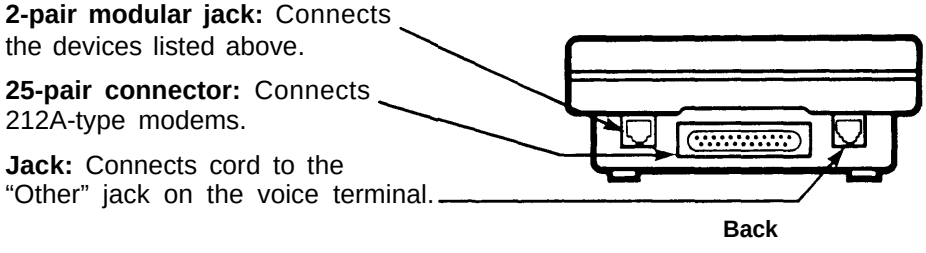

CIB 3008

Control Unit Accessories

Some optional accessories connect directly to the control unit to give the MERLIN system additional capabilities.

Extra Alerts

Extra alerts such as horns and bells provide signaling in large, open areas (for example, warehouses and parking lots) and especially noisy environments. Extra alerts connect either directly to the Services Module on the control unit or by the Extra Alert Switch.

Extra Alert Horn: Provides a loud signal in noisy environments where a unique, non-bell sound must be heard over a large area. It can be used indoors or out.

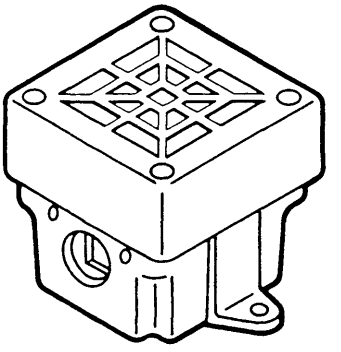

Extra Alert Bell: Alerts people that a telephone is ringing by providing a loud signal in remote or noisy areas. It can be used indoors or out.

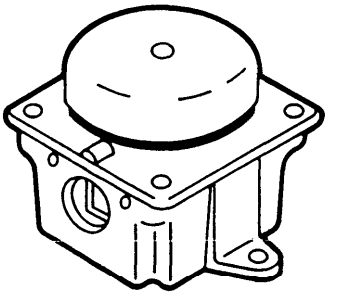

Extra Alert Switch: Connects two extra alerts. Turns alert signals on and off (if an alerting device is connected to only one jack) and selects between alternate signals, for example an alert strobe during business hours and an alert horn at night (if alerting devices are connected to both device jacks). A Line Bridging Adapter inserted into either device jack permits connection of a second alerting device to that device jack.

Jack: Connects to Services Module of control unit.

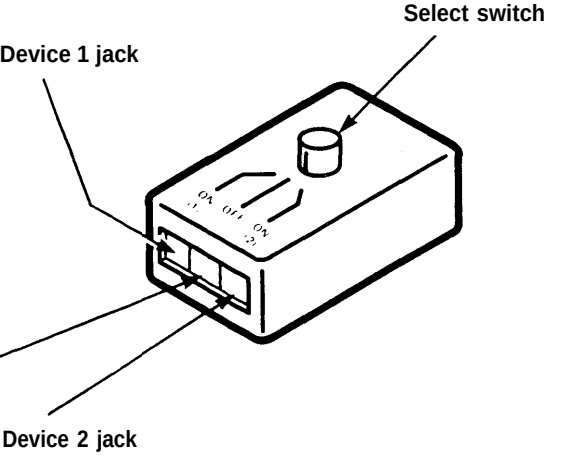

Auxiliary Power Unit (Model 820 only)

The Auxiliary Power Unit connects to the Model 820 control unit to provide the extra power necessary in systems with many accessories or 34-button deluxe voice terminals. Follow these steps to see if the system requires an Auxiliary Power Unit.

1. Count how many voice terminals are connected to the control unit. Do not count 34-button deluxe voice terminals or voice terminals that have a Voice Terminal Power supply.
2. Count how many accessories (such as Hands-Free Units) and 34-button deluxe voice terminals are connected to the control unit and add the two numbers together. Do not count voice terminals that have a Voice Terminal Power Supply.
3. Add numbers from steps 1 and 2. If the total exceeds 28, an Auxiliary Power Unit is recommended. If the problem occurs only at 34-button deluxe voice terminals, adding Voice Terminal Power Supplies at those voice terminals instead of an Auxiliary Power Unit is recommended.

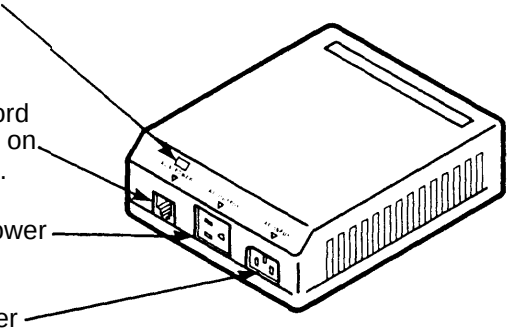

Isolating and Correcting Troubles

To isolate and correct a trouble:

FIRST: Determine if more than one voice terminal or basic Touch-Tone or rotary telephone is experiencing the trouble.

SECOND: If the trouble appears on only one voice terminal or telephone, find the symptom in the list below titled “A. Trouble on One Telephone.” The list includes examples of problems categorized under each symptom. Turn to the tab divider for the symptom and follow the procedures for your specific problem.

If the same problem appears on all or most telephones, find the symptom under the list titled “B. Trouble on Several Telephones.” Turn to the tab divider for the symptom and follow the procedures for your specific problem.

Refer to the “Functional Overview” or to the CIBs in this manual if you need more detail on any component. For more information on programming voice terminals, refer to the *User’s Guide: Models 206, 410, and 820* and the administration manual that came with the feature cartridge (optional) for your system.

The index will also help you find information on specific problems. If you cannot find your problem in the symptom list or index, contact your equipment supplier.

A. TROUBLE ON ONE TELEPHONE

Symptoms

1. Ringing (no ringing, constant ringing, etc.)
2. Dialing (no dial tone, trouble with Auto Dial buttons, etc.)
3. Hearing (user or outside caller cannot hear, etc.)
4. Lights (lights behave in peculiar ways)
5. Features (problems with holding calls, transferring calls, etc.)
6. Accessories (problems with Hands-Free Units)
7. Miscellaneous (voice terminal or accessory suddenly fails, etc.).

B. TROUBLE ON SEVERAL TELEPHONES

Symptoms

1. Ringing (no ringing on a particular outside line, peculiar ringing, etc.)
2. Dialing (cannot dial out on one or more outside lines, no dial tone, etc.)
3. Hearing (cannot hear outside party clearly, etc.)
4. Lights (dim lights, peculiar lights)
5. Features (problems with transferring calls, programming buttons, etc.)
6. Accessories (problems with music, paging, etc.)
7. Entire system down (no lights on control unit and no voice terminals operative)
8. Miscellaneous (interference with televisions, dropped calls, etc.).

TROUBLE ON ONE TELEPHONE
Ringing Symptoms

A line rings but no caller is on the line	A1-3
10-button voice terminals exhibit peculiar ringing and/or extra lights are lit	A1-3
Voice terminal rings constantly, whether on or off hook	A1-4
Voice terminal does not ring when a call is transferred to it	A1-5
Off-premises telephone rings after user hangs up	A1-5
Voice terminal does not ring on incoming outside calls	A1-6

NOTE: Use this section only if you have isolated the problem to one voice terminal or telephone (in other words, it is not a systemwide problem).

Symptom: A line rings but no caller is on the line. (The user attempts to answer a call but loses it and receives dial tone on a different line.)	
Possible Cause	***Recommended Action***
User rocked the handset while lifting it.	Rocking the handset causes the voice terminal to go off hook, on hook, then off hook again. Instruct the user to lift the handset without rocking it to either side.

Symptom: 10-button voice terminals exhibit peculiar ringing and/or extra lights are lit.	
Possible Cause	***Recommended Action***
A brief ac power outage occurred.	A brief ac power outage causes certain early production 10-button voice terminals to exhibit peculiar ringing. Extra lights also may be on. Momentarily removing ac power from the voice terminal corrects the problem. Do this by unplugging the voice terminal cord at the modular jack and plugging it in again.

Symptom: Voice terminal rings constantly, whether on or off hook.	
Possible Cause	***Recommended Action***
1. Voice terminal T/P switch is not in center position.	1. Make sure the T/P switch is in the center position. 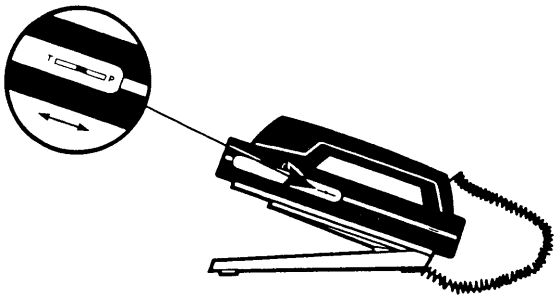
2. Voice terminal is defective.	2. When the ringing occurs only on incoming calls and continues even when the user picks up the handset, the switchhook may be sticking. If it is, replace the voice terminal.

Symptom: Voice terminal does not ring when a call is transferred to it. (The Transfer feature is available only if the system has a feature cartridge.)	
Possible Cause	***Recommended Action***
Do Not Disturb feature is activated.	If the green light is on by a **Do Not Disturb** button, touch the button to deactivate the feature. Do Not Disturb may be programmed on a button without lights beside it, a mislabeled button, or an unlabeled button. To make sure Do Not Disturb is deactivated in these cases, program the feature on a button with lights. This removes the feature from its previous position.

Symptom: Off-premises telephone rings after user hangs up.	
Possible Cause	***Recommended Action***
The user may accidentally have put the call on hold by briefly depressing the switchhook or rocking the handset.	Advise the user to depress the switchhook firmly or replace the handset when disconnecting a call.

Symptom: Voice terminal does not ring on incoming outside calls on one or more lines

Possible Cause	***Recommended Action***
1. Volume control setting is too low.	1. Slide volume control to a higher position and test by making a call to one of the user's outside lines from another voice terminal. 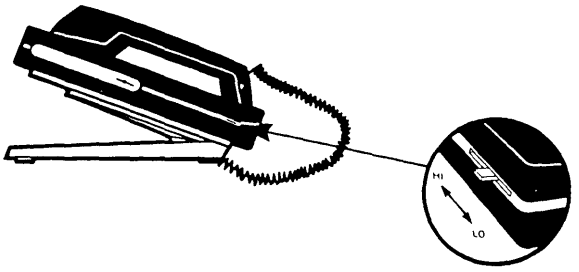
2. User programming of line ringing options is incorrect (applies only if the system has a feature cartridge).	2. See if voice terminal is programmed for "no ring." a. Slide T/P switch to *P* (program) position. b. Check red light associated with the line that doesn't ring. The red light indicates how the line is programmed for ringing: **On = ringing** **Flashing = delayed ring** **Off = no ring** If the red light is off, the line is programmed for "no ring." Change it by touching the line button until the light is on or flashing. c. Slide T/P switch to center position.

3. Do Not Disturb feature is activated (applies only if the system has a feature cartridge).	3. If the green light is on by a **Do Not Disturb** button, touch the button to deactivate the feature. Do Not Disturb may be programmed on a button without lights beside it, a mislabeled button, or an unlabeled button. To make sure Do Not Disturb is deactivated in these cases, program the feature on a button with lights. This removes the feature from its previous position. Relabel the buttons accordingly.
4. Voice terminal is defective.	4. To check the voice terminal: a. Switch the suspect voice terminal with a voice terminal known to be working properly. b. Go to another voice terminal and make a call to the working voice terminal on an outside line. c. If the working voice terminal rings, the suspect voice terminal is defective. Replace it.
5. If this user has a 5-button voice terminal administered for button-free operation, only transferred and intercom calls ring. (This applies only if the system has a feature cartridge.)	5. If outside calls must ring at this user's voice terminal, switch the 5-button voice terminal for a larger one.

TROUBLE ON ONE TELEPHONE
Dialing Symptoms

User hears dial tone but cannot dial out A2-3

User cannot program alternate long-distance or other computer-based services on Outside Auto Dial buttons A2-3

User lifts handset and does not hear dial tone A2-4

When trying to access Centrex, PBX, or custom calling features, dialing # and a 2-digit feature code does not work A2-5

User with off-premises telephone hears intercom dial tone but cannot place an outside call A2-5

Off-premises telephone has no dial tone and cannot receive calls A2-6

NOTE: Use this section only if you have isolated the problem to one voice terminal or telephone (in other words, it is not a systemwide problem).

Symptom: User hears dial tone but cannot dial out.	
Possible Cause	***Recommended Action***
1. Voice terminal is restricted. (This feature is available only on certain feature cartridges.)	1. If you have a feature cartridge, the voice terminal may be intentionally restricted from dialing outside numbers. Ask the system administrator if the voice terminal should be restricted. The administration manual that came with the feature cartridge contains instructions for placing or removing restrictions on outward calls.
2. Voice terminal is defective.	2. If the voice terminal is not restricted: a. Switch the suspect voice terminal with a voice terminal known to be working properly. b. Try to dial out on the working voice terminal. c. If you can dial out, the suspect voice terminal is defective. Replace it.

Symptom: User cannot program alternate long-distance or other computer-based services on Outside Auto Dial buttons. (This feature is available only if the system. has a feature cartridge.)	
Possible Cause	***Recommended Action***
Storage capacity of Outside Auto Dial feature has been exceeded.	A maximum of 16 digits or characters can be stored on an Outside Auto Dial button. **Hold(Pause), Drop(Stop),** or **Recall** (or **Transfer** for Touch-Tone Enable, a feature available only on some feature cartridges) counts as a digit. Program the long distance or other computer-based service access and code numbers onto one button. Then program the numbers you want to call using those services onto other Outside Auto Dial buttons. To dial out, touch the access number button and wait for the computer tone to sound over the voice terminal speaker, then touch the next button. If a number sequence requires a time interval as a “wait for dial tone,” touch **Hold(Pause)** or **Drop(Stop),** or split the number sequence at that point.

Symptom: User lifts handset and does not hear dial tone.	
Possible Cause	***Recommended Action***
1. Voice terminal incompletely outward call restricted (applies only if the system has a feature cartridge).	1. If you have a feature cartridge, the voice terminal may be intentionally restricted from making outside calls. If the system administrator wants the voice terminal unrestricted, follow the procedures in the administration manual that came with the feature cartridge.
2. All outside lines are busy. Green lights next to all line buttons will be lit. No red lights will be lit.	2. Instruct the user to hang up the voice terminal and wait for a free line or use the Line Request feature (available only on some feature cartridges; see the *User's Guide: Models 206, 410, and 820).* If this happens often, adding more outside lines may be wise. For more information, see the *Installation Guide: Models 206 and 410* or *Installation Guide: Model 820.*
3. The voice terminal may be programmed for Manual Line Selection instead of Automatic Line Selection (applies only to systems with certain feature cartridges).	3. Either touch a line button to get dial tone or reprogram the Automatic Line Selection feature. See the *User's Guide: Models 206, 410, 820* for instructions.
4. Wiring between the voice terminal and control unit or network interface and control unit is faulty.	4. Make sure wiring between the voice terminal and control unit or network interface and control unit is not damaged. Make sure connectors are plugged in securely. 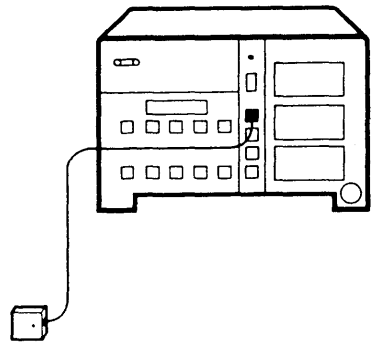

Symptom: When trying to access Centrex, PBX, or custom calling features, dialing # and a 2-digit feature code does not work. (This feature is available only on feature cartridge with the Speed Dialing feature.)	
Possible Cause	***Recommended Action***
Dialing # and a 2-digit code is reserved for speed dialing numbers.	To access a Centrex, PBX, or custom calling feature, dial ## then the feature code.

Symptom: User with off-premises telephone hears intercom dial tone but cannot place an outside call.	
Possible Cause	***Recommended Action***
User is not dialing the access number (for instance, 9).	Instruct the user to dial the access number before the outside number.

Symptom: Off-premises telephone has no dial tone and cannot receive calls.	
Possible Cause	***Recommended Action***
1. Voice terminal jack in the control unit is faulty.	1. Test the jack by plugging a MERLIN system voice terminal into the jack.
2. Wiring between the off-premises telephone and control unit is faulty.	2. Make sure wiring is not damaged and connectors are plugged in securely between these points: • Between the off-premises telephone and network interface • Between the network interface for the off-premises line and the Off-Premises Line Input jack on the Off-Premises Telephone Interface • Between the To Voice Terminal Module jack on the Off-Premises Telephone interface and a voice terminal jack on the control unit
3. Local telephone company line is faulty.	3. Plug a basic telephone into the network interface or jack field line jack at the control unit. If there is no dial tone, have the local telephone company check the line.
4. Off-premises telephone is defective.	4. Unplug the suspect off-premises telephone. Plug in a telephone known to be working properly. If the trouble does not appear, replace the suspect telephone.
5. Off-Premises Telephone Interface is defective.	5. If the trouble still exists, replace the Off-Premises Telephone Interface.
6. Control unit is defective.	6. If a new module does not solve the problem, the control unit probably needs repair.

TROUBLE ON ONE TELEPHONE
Hearing Symptoms

User in a noisy room has trouble hearing outside or intercom calls A3-3

User hears excessive breath noises from himself or herself A3-3

User with off-premises telephone has trouble hearing A3-4

Outside caller intermittently has trouble hearing a user A3-5

NOTE: Use this section only if you have isolated the problem to one voice terminal or telephone (in other words, it is not a systemwide problem).

Symptom: User in a noisy room has trouble hearing outside or intercom calls.	
Possible Cause	***Recommended Action***
1. User is holding the handset too near his or her mouth.	1. Instruct the user to hold the handset farther from his or her mouth.
2. User may need a Push-to-Listen Handset.	2. The user may need a Push-to-Listen Handset (R8-type). it is designed for environments with a noise level of 80 decibels or more.

Symptom: User hears excessive breath noises from himself or herself.	
Possible Cause	***Recommended Action***
1. User is holding the handset too near his or her mouth.	1. Instruct the user to hold the handset farther from his or her mouth.
2. User may need a Push-to-Listen Handset.	2. The user may need a Push-to-Listen Handset (R8-type). It is designed for environments with a noise level of 80 decibels or more.

Symptom: User with off-premises telephone has trouble hearing.	
Possible Cause	***Recommended Action***
1. Off-premises telephone may be defective.	1. Switch the suspect off-premises telephone with a basic Touch-Tone or rotary telephone known to be working properly. Place an outside call. If you can hear clearly, replace the suspect off-premises telephone.
2. Off-Premises Telephone Interface may be defective.	2. At the control unit location, unplug the cord that connects the Off-Premises Telephone Interface to a jack in a Voice Terminal Module. Plug a voice terminal into the jack on the module. Place an outside call. If hearing is no longer a problem, replace the Off-Premises Telephone Interface.
3. Line from the central office to the off-premises telephone should be upgraded.	3. Contact the local telephone company representative about upgrading the line between the central office and the off-premises telephone. Too much sound is being lost on the line. Notify the representative of these specifications for the off-premises telephones: • Standard jacks: USOC code SAY • Facility interface code: FIC OL 13C

Symptom: Outside caller intermittently has trouble hearing a user.

Possible Cause	***Recommended Action***
Radio-frequency interference (RFI) is occurring.	Certain early production voice terminals may be susceptible to high RFI levels. Voice terminals manufactured beginning April 1983 have improved RFI immunity. If a radio transmitter is in the area, replace early production voice terminals with later vintage models. Make sure the system power has a good third-wire (green wire) ground, not a conduit ground. Have an electrician check if necessary.

TROUBLE ON ONE TELEPHONE
Light Symptoms

Voice terminal behaves abnormally in the test mode *(T* setting of T/P switch) A4-3

NOTE: Use this section only if you have isolated the problem to one voice terminal or telephone (in other words, it is not a systemwide problem).

Symptom:	Voice terminal behaves abnormally in the test mode (*T* setting of T/P switch). Normally, when a voice terminal is in the test mode, the red and green lights flash alternately and a tone sounds regularly.
Possible Cause	***Recommended Action***
1. Modular jack for the voice terminal is miswired.	1. Make sure the wires from the cable are terminated in the modular jack in this order from left to right: 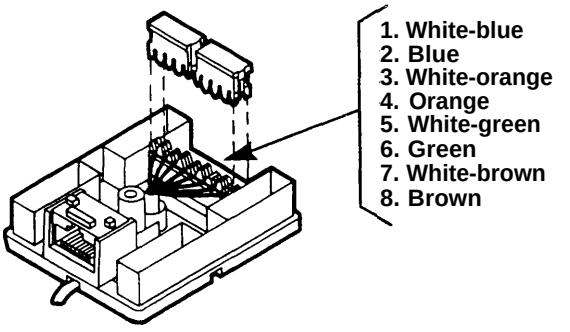
2. Wiring between the control unit and voice terminal is faulty.	2. Make sure the wiring between the voice terminal, jack field, and control unit is not damaged. Make sure the connections are secure. 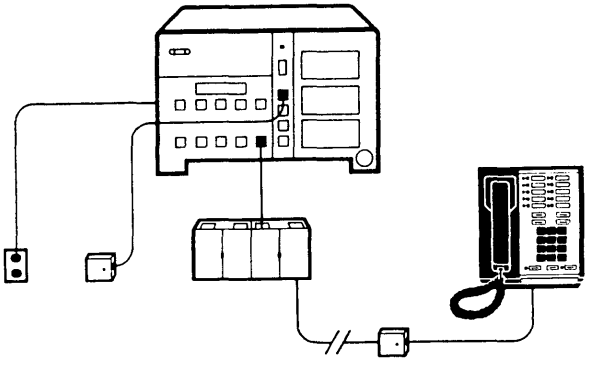
3. Voice terminal is defective.	3. Switch the suspect voice terminal with one known to be working properly. If the trouble does not appear on the working voice terminal, the suspect voice terminal is defective. Replace it.

4. Control unit is defective.	4. **Make sure all cords are labeled before unplugging them from the control unit.** Unplug the voice terminal extension cord or jumper cord from the control unit. Plug the cord into a different Voice Terminals jack on the control unit. See if the voice terminal operates normally in the test mode. If it does, the control unit probably will require repair. **NOTE:** If the system is a Model 820, plug the voice terminal extension cord or jumper cord into a different Voice Terminal Module. If the voice terminal operates normally in the test mode, replace the Voice Terminal Module.

TROUBLE ON ONE TELEPHONE
Feature Symptoms

Voice terminal speaker squeals when user hangs up handset	A5-3
User can dial out normally from dial pad but Outside Auto Dial button does not work	A5-3
User attempts to retrieve a held call and loses it	A5-4
A call cannot be conferenced	A5-4
Toll call restricted voice terminal is unable to make a local call	A5-5
Administrator cannot restrict outside calls at a voice terminal or basic telephone	A5-6
Intercom calls to a 5- or 10-button voice terminal get a busy signal but the user is not on another line	A5-7
User receives voice signal for a transferred call but gets a different call after lifting the handset. (This applies only to Model 410.)	A5-7
Voice terminal more than 200 feet from a Model 206 control unit does not operate properly	A5-8
Voice terminal receives calls transferred to it with intercom voice announcement as transfer rings	A5-8
User with an off-premises telephone drops the first outside call while attempting to conference a second outside call	A5-9
User with an off-premises telephone cannot put a call on hold	A5-9

NOTE: Use this section only if you have isolated the problem to one voice terminal or telephone (in other words, it is not a systemwide problem).

Symptom: Voice terminal speaker squeals when user hangs up handset (applies only if the system has a feature cartridge).	
Possible Cause	***Recommended Action***
The speaker is on and sets up a feedback path with the handset microphone.	Instruct the user to turn the speaker off before hanging up the handset. Lowering the volume control setting will also help.

Symptom: User can dial out normally from dail pad but Outside Auto Dial button does not work (applies only if the system has a feature cartridge).	
Possible Cause	***Recommended Action***
Recall can only be used as the first element in a stored number.	Reprogram the number on the Outside Auto Dial button.

Symptom: User attempts to retrieve a held call and loses it.	
Possible Cause	***Recommended Action***
User rocked the handset while lifting it.	Rocking the handset causes the voice terminal to go off hook, on hook, and then off hook again. Instruct the user to lift the handset without rocking it to either side.

Symptom: A call cannot be conferenced (applies only if the system has feature cartridge).	
Possible Cause	***Recommended Action***
1. User held the call with **Transfer** instead of **Hold.** Touching **Transfer** automatically puts a call on hold, but is incorrect for conferencing calls.	1. Instruct the user not to hold a call with **Transfer** when that call will be conferenced. The call should be held with **Hold.**
2. The conference limit may have been reached.	2. Instruct the user that only two outside lines may be conferenced at once.

Symptom: Toll call restricted voice terminal is unable to make a local call.	
Possible Cause	***Recommended Action***
1. Toll Prefix/Area Code switch on the control unit may be in wrong position. (This applies only to Model 820.) 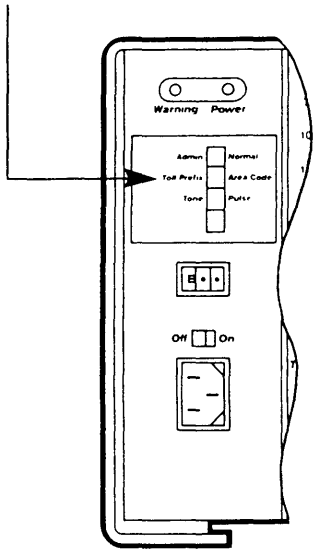	1. Set the switch to *Toll Prefix* if you must dial 0 or 1 before you dial an area code. Set the switch to *Area Code* if you begin with the area code when you dial a long distance number.
2. Toll call restriction may be misadministered.	2. Refer to the administration manual that came with the feature cartridge for programming instructions.

Symptom: Administrator cannot restrict outside calls at a voice terminal.	
Possible Cause	***Recommended Action***
1. Toll Prefix/Area Code switch may be in wrong position. (This applies only to Model 820.) 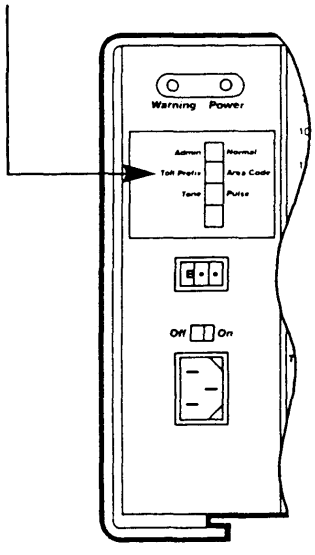	1. Set the switch to *Toll Prefix* if you must dial 0 or 1 before you dial an area code. Set the switch to *Area Code* if you begin with the area code when you dial a long distance number.
2. Toll call restriction may be misadministered.	2. Refer to the administration manual that came with the feature cartridge for programming instructions.
3. A basic Touch-Tone or rotary telephone may be connected to a Multipurpose Adapter.	3. If a basic Touch-Tone or rotary telephone is connected to a Multipurpose Adapter, it cannot be call restricted.

Symptom:	Intercom calls to a 5- or 10-button voice terminal get a busy signal but the user is not on another line. Outside calls do not ring on the voice terminal either.
Possible Cause	***Recommended Action***
The Do Not Disturb feature is activated.	If the green light is on by a **Do Not Disturb** button, touch the button to deactivate the feature. Do Not Disturb may be programmed on a button without lights beside it, a mislabeled button, or an unlabeled button. To make sure Do Not Disturb is deactivated in these cases, program the feature on a button with lights. This removes the feature from its previous position. Relabel the buttons accordingly.

Symptom:	User receives voice signal for a transferred call but gets a different call after lifting the handset. (This applies only to Model 410.)
Possible Cause	***Recommended Action***
Two calls are being transferred to the voice terminal at the same time. One call is announced over the speaker. The other call is indicated by a red light next to a line button. When the user lifts the handset in response to the voice signaling, the user gets the call with the red light.	This occurrence is normal.

Symptom:	Voice terminal more than 200 feet from a Model 206 control unit does not operate properly. Some of the specific symptoms are: • Lights do not flash alternately in test mode. • Buttons click when pressed but do not respond. • Intercom calls from other users receive a busy signal even when the voice terminal is idle.
Possible Cause	***Recommended Action***
Circuitry in early control units limits voice terminal distance from the control unit to less than 200 feet. These control units have serial numbers of less than 2000. The serial number, located on the bar code label on the bottom of the control unit, is the number between the series of zeros and the last digit. For example, the serial number for the bar code number 6106 000 001 327 9 is 1327.	Ask your equipment supplier for a control unit with a serial number greater than 2000.
Symptom:	Voice terminal receives calls transferred to it with intercom voice announcement as transfer rings. (This applies only to certain feature cartridges.)
Possible Cause	***Recommended Action***
The Voice Announcement Disable feature has been activated on the voice terminal (applies only to certain feature cartridges).	Instruct the user to go into program mode by sliding the T/P switch into the *P* position. If the green light by **Intercom** is *off,* the voice terminal is programmed *not* to receive intercom voice calls. To permit intercom voice calls, touch **Intercom** until the green light appears. Exit program mode by sliding the T/P switch to the center position.

Symptom: User with an off-premesis telephone drops the first outside call while attempting to conference a second outside call.	
Possible Cause	***Recommended Action***
The user has put the first call on hold before dialing the second call.	Instruct the user to follow this procedure when conferencing calls: a. Place first call. b. Announce call. c. Press switchhook down firmly and then release it. *Intercorn dial tone will indicate the call is on hold.* d. Announce call. e. Press switchhook down firmly, then release it. Conference is now complete.

Symptom: User with an off-premises telephone cannot put a call on hold.	
Possible Cause	***Recommended Action***
All intercom lines are busy. Intercom dial tone is necessary when holding a call.	Instruct the user to wait until an intercom line is available or ask the caller to put the call on hold on his or her system.

TROUBLE ON ONE TELEPHONE
Accessory Symptoms

Lights behave abnormally on a 34-button voice terminal with Hands-Free Unit A6-3

NOTE: Use this section only if you have isolated the problem to one voice terminal or telephone (in other words, it is not a systemwide problem).

Symptom: Lights behave abnormally on a 34-button deluxe voice terminal with Hands-Free Unit. This may occur at system installation or after a power failure.	
Possible Cause	***Recommended Action***
Too much start-up load is being placed on the control unit.	Add a Voice Terminal Power Supply, or, each time the power fails or the control unit is reset, do the following: a. Unplug the HFU. b. Unplug the control unit ac power cord, then plug it in again. (For Model 820, set the On/Off switch to *Off,* then to *On.)* c. Plug in the HFU.

TROUBLE ON ONE TELEPHONE
Miscellaneous Symptoms

Outside lines added to the system do not appear at the attendant position A7-3

Outside lines taken away from the system still appear at the attendant position A7-3

A voice terminal or voice terminal accessory suddenly fails A7-4

NOTE: Use this section only if you have isolated the problem to one voice terminal or telephone (in other words, it is not a systemwide problem).

Symptom: Outside lines added to the system do not appear at the attendant position (applies only to systems with certain feature cartridges).	
Possible Cause	***Recommended Action***
The lines added to the system were not administered to the system.	Refer to the administration manual that came with the feature cartridge for instructions on administering these lines to the system.

Symptom: Outside lines taken away from the system still appear at the attendant position (applies only to systems with certain feature cartridges).	
Possible Cause	***Recommended Action***
These lines were not administered out of the system.	Refer to the administration manual that came with the feature cartridge for instructions on administering these lines out of the system.

Symptom: A voice terminal or voice terminal accessory suddenly fails.

Possible Cause	***Recommended Action***
A surge of static electricity occurred.	If new carpeting is causing the static electricity, spray the area with an antistatic spray. Make sure the control unit is connected to a third-wire (green-wire) ground.

TROUBLE ON SEVERAL TELEPHONES
Ringing Symptoms

A particular outside line does not ring B1-3

Voice terminals have a peculiar ring, lights flash randomly, and users often hear clicks through the handset B1-5

Symptom: A particular outside line does not ring. Other lines do ring.

Possible Cause	***Recommended Action***
1. Wiring between the network interface and control unit is faulty.	1. See if dial tone is present on the line that does not ring. If not, make sure wiring between network interface and control unit is not damaged. Make sure connectors are plugged in securely. 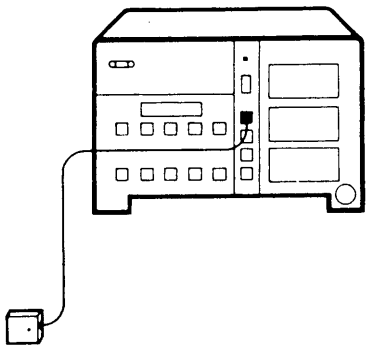
2. Local telephone company line is faulty.	2. Verify local telephone company line operation by plugging in a basic telephone at the network interface or jack field line jack. If dial tone is not present, arrange for the local telephone company to repair the line. 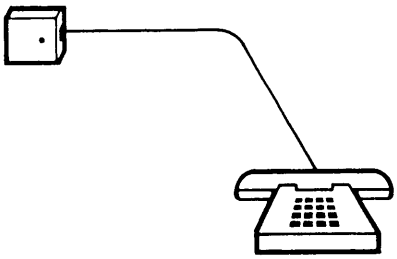

3. Control unit is defective.	3. **Make sure all cords are labeled before unplugging them from the control unit.** At the control unit, unplug the line cord for the line with trouble. Plug the line cord for another outside line into that jack. See if the outside line will ring. If it will not, the control unit probably requires repair. If the system is a Model 820, the Line Module may be defective.
4. Line buttons are mislabeled.	4. Lift the handset at each voice terminal and press the line button for the line that does not ring. If there is no dial tone, the line may not be assigned to that voice terminal. Either assign that line to the voice terminal or instruct the user to program the button with a feature.
5. User programming of line ringing options is incorrect. (This applies only if the system has a feature cartridge.)	5. See if voice terminals are programmed for "no ring." a. Slide T/P switch to *P* (program) position. b. Check red light associated with the line that does not ring. The red light indicates how the line is programmed for ringing: **On = ringing** **Flashing = delayed ring** **Off = no ring** If the red light is off, the line is programmed for "no ring." Change it by touching the line button until the light is on or flashing. c. Slide T/P switch to center position.

Symptom: Voice terminals have a peculiar ring, lights flash randomly, and users often hear clicks through the handset.

Possible Cause	***Recommended Action***
Feature cartridge was plugged in with ac power on.	Unplug the ac power cord, remove and reinsert the feature cartridge, and plug in the ac power cord.

TROUBLE ON SEVERAL TELEPHONES
Dialing Symptoms

Dial tone is not present on a particular line but is heard on other lines B2-3

Dial tone is present on all lines, but users cannot dial out on all lines B2-4

Symptom: Dial tone is not present on a particular line but is heard on other lines.	
Possible Cause	***Recommended Action***
1. Local telephone company line is faulty.	1. Verify local telephone company line operation by plugging in a basic telephone at the network interface or jack field line jack. If dial tone is not present, arrange for the local telephone company to repair the line.
2. Wiring between the network interface and the control unit is faulty.	2. Make sure wiring between network interface and control unit is not damaged. Make sure connectors are plugged in securely.
3. Control unit is defective.	3. **Make sure all cords are labeled before unplugging them from the control unit.** At the control unit, unplug the line cord for the line with trouble. Plug a line cord for another outside line into that jack. See if the outside line will ring. If it will not, the control unit will probably require repair. If the system is a Model 820, the Line Module may be defective.

Symptom: Dial tone is present on all lines, but users cannot dial out on all lines.	
Possible Cause	***Recommended Action***
1. The Tone/Pulse option for outside lines may be misadministered.	1. Set the Tone/Pulse switch on the control unit to Tone for Touch-Tone dialing service or *Pulse* for rotary service.
2. If the red Warning light on the control unit is on, the control unit may need to be reset.	2. Unplug the control unit. (On Model 820, set the On/Off switch to *Off* instead of unplugging the control unit.) Make sure all modules are firmly seated in the control unit slots. Plug in the control unit again. Wait 5 minutes.

TROUBLE ON SEVERAL TELEPHONES
Hearing Symptoms

Users cannot hear outside party clearly B3-3

Symptom: Users cannot hear outside party clearly.	
Possible Cause	***Recommended Action***
1. Local telephone company line is faulty.	1. Verify voice quality on local telephone company line by plugging in a basic Touch-Tone or rotary telephone at the network interface or jack field line jack. If voice quality is unacceptable, contact the local telephone company.
2. Users need special handsets.	2. Users may need Impaired-Hearing Handsets (R6-type) or Push-to-Listen Handsets (R8-type).

TROUBLE ON SEVERAL TELEPHONES
Light Symptoms

Voice terminal lights are dim, especially when the voice terminal T/P switch is in the *T* position (Model 820 only) B4-3

Voice terminal red and green lights do not flash alternately in test mode B4-4

Control unit red Warning light flutters and feature catridge is in place
Users cannot place or receive calls B4-4

Symptom: Voice terminal lights are dim, especially when the voice terminal T/P switch is in the *T* position (Model 820 only).

Possible Cause

The control unit is not supplying enough power. You may need an Auxiliary Power Unit or a Voice Terminal Power Supply.

Recommended Action

To supply more power to 34-button deluxe voice terminals, use Voice Terminal Power Supplies.

Follow these steps to see if the system requires an Auxiliary Power Unit:

1. Count how many voice terminals are connected to the control unit. Do not count 34-button deluxe voice terminals or voice terminals that have a Voice Terminal Power Supply.
2. Count how many accessories (such as Hands-Free Units) and 34-button deluxe voice terminals are connected to the control unit and add the two numbers together. Do not count voice terminals that have a Voice Terminal Power Supply.
3. Add the numbers from steps 1 and 2. If the total exceeds 28, an Auxiliary Power Unit is recommended. If the problem occurs only at 34-button deluxe voice terminals, adding Voice Terminal Power Supplies at those voice terminals *instead* of an Auxiliary Power Unit is recommended.

Symptom: Voice terminal red and green lights do not flash alternately in the test mode (*T* setting of T/P switch).	
Possible Cause	***Recommended Action***
1. The red Warning light on the control unit may be on.	1. Reset the control unit by unplugging the ac power cord then plugging it in again.
2. Control unit is defective.	2. If the problem persists, the control unit probably needs repair.

Symptom: Control unit red Warning light flutters and feature cartridge is in place. Users cannot place or receive calls.	
Possible Cause	***Recommended Action***
Feature cartridge is not plugged in completely.	Unplug ac power cord and insert feature cartridge securely. Plug in ac power cord and place a call to check system operation.

TROUBLE ON SEVERAL TELEPHONES
Feature Symptoms

User cannot pick up a call transferred from another user B5-3

Last Number Redial and Saved Number Redial features do not work on a MERLIN system operating behind a PBX B5-3

Outside Auto Dial feature does not work B5-4

Symptom: User cannot pick up a call transferred from another user (applies only if the system has a feature cartridge).	
Possible Cause	***Recommended Action***
1. The Do Not Disturb feature may be activated on the voice terminal to which the call is directed.	1. Check Do Not Disturb feature: If the green light is on by a **Do Not Disturb** button, touch the button to deactivate the feature. Do Not Disturb may be programmed on a button without lights beside it, a mislabeled button, or an unlabeled button. To make sure Do Not Disturb is deactivated in these cases, program the feature on a button with lights. This removes the feature from its previous position. Relabel the buttons accordingly.
2. The user may be lifting the handset before the voice terminal gives the transfer ring.	2. Instruct the user to wait for the transfer ring before picking up the handset. Otherwise, the call must be transferred again.

Symptom: Last Number Redial and Saved Number Redial features do not work on a MERLIN system operating behind a PBX (applies only if the system has a feature cartridge).	
Possible Cause	***Recommended Action***
Some PBXs require a pause after the number (for example, 9) needed to access an outside line. The MERLIN system cannot put in the pause when saving a number.	These features will not work if the PBX does not return dial tone immediately after the access number is dialed.

Symptom: Outside Auto Dial feature does not work (applies only if the system has a feature cartridge).	
Possible Cause	***Recommended Action***
1. The tone/pulse option has been misadministered. (In this case, users cannot dial out at all, even from the dial pad.)	1. Make sure the Tone/Pulse switch at the control unit is set to *Tone* for Touch-Tone Service or *Pulse* for rotary service. *(Pulse* always works, even for lines with Touch-Tone service.)
2. The MERLIN system is operating behind a local telephone company central office or PBX that is slow in providing dial tone.	2. Instruct users to program **Hold(Pause)** as the first digit on an Outside Auto Dial button.
3. The MERLIN system is operating behind a PBX and is outputting numbers too quickly for the PBX.	3. The MERLIN system is designed for use behind a PBX that accepts AT&T standard dialing signals at the current standard (10 digits per second). See if your PBX meets this standard.

TROUBLE ON SEVERAL TELEPHONES
Accessory Symptoms

Music-on-Hold, Background Music, and/or Loudspeaker Paging are too loud or too soft B6-3

Symptom: Music-on-Hold, Background Music, and/or Loudspeaker Paging are too loud or too soft.

Possible Cause

One or more of the following may need adjustment:

- Music source level
- Paging amplifier level
- Music-on-Hold or Background Music volume control on the Music-on-Hold or Music-on-Hold/Paging Cartridge

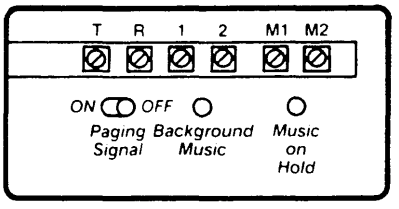

Music-on-Hold/Paging Cartridge

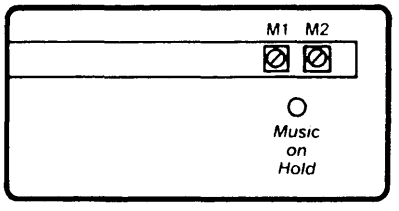

Music-on-Hold Cartridge

Recommended Action

Follow the instructions for the numbered step that applies to your music and/or paging accessories.

NOTE: To hear Music-on-Hold as you adjust the volume, go to a voice terminal and dial one of the system's outside line numbers. Answer the call on another voice terminal. Place the call on hold. You will be able to hear the Music-on-Hold at the first voice terminal.

1. If you have *one* music source:
   a. Turn the Music-on-Hold volume control fully counterclockwise, then clockwise until the music volume (as heard through the first voice terminal) is acceptable.
   b. Adjust paging speakers to the desired paging level.
   c. Turn the Background Music volume control fully counterclockwise, then clockwise until the music volume is acceptable.

2. If you have one music source for Music-on-Hold and a separate music source for Background Music (or two outputs from one source):
   a. Adjust the Music-on-Hold volume control. Turn the volume control fully counterclockwise, then clockwise until the music volume (as heard through the first voice terminal) is acceptable.
   b. Adjust paging speakers to the desired paging level.
   c. Turn the Background Music volume control on the cartridge fully counterclockwise (off).
   d. Adjust the music volume at the music source for background music.

	3. If you have Music-on-Hold but *no* Background Music: a. Turn the Background Music volume control on the cartridge fully counterclockwise (off). b. Turn the Music-on-Hold volume control fully counterclockwise, then clockwise until the music volume (as heard through a voice terminal) is acceptable.
	4. If you have Background Music but *no* Music-on-Hold: a. Turn the Music-on-Hold volume control fully counterclockwise (off). b. Adjust paging speakers to the desired paging level. c. Turn the Background Music volume control fully counterclockwise, then clockwise until the music volume is acceptable.
	5. If you have paging but *no* music features: a. Turn both volume controls fully counterclockwise. b. Adjust paging speakers to the desired paging level.

TROUBLE ON SEVERAL TELEPHONES
Entire System Down Symptoms

Entire system is down. Red and green lights on control unit are not lit. System is totally inoperative B7-3

Green Power light on the control unit is off, but there is no power failure B7-4

Symptom: Entire system is down. Red and green lights on control unit are not lit. System is totally inoperative.

Possible Cause	***Recommended Action***
1. There is no ac power.	1. Make sure the control unit is not connected to an outlet controlled by a switch. Check the connections between the contol unit, an Auxiliary Power Unit (may be present with Model 820), and the ac outlet.
2. Outlet is defective.	2. Plug in a lamp or radio to test the outlet.
3. Control unit is defective.	3. If the system is still down, replace the control unit.

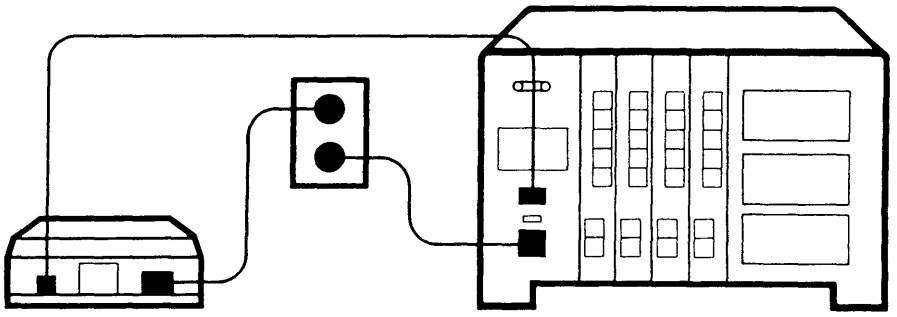

AC power hookup

Symptom: Green Power light on the control unit is off, but there is no power failure.	
Possible Cause	***Recommended Action***
1. One or more cartridges are inserted improperly.	1. Unplug the control unit ac power cord. Remove and securely replace each cartridge. Reconnect the control unit power cord.
2. Control unit is defective.	2. If the green Power light remains off, replace the control unit.

TROUBLE ON SEVERAL TELEPHONES
Miscellaneous Symptoms

An outside call is dropped during conversation B8-3

MERLIN system interferes with television reception B8-4

Symptom: An outside call is dropped during conversation.	
Possible Cause	***Recommended Action***
1. A user made an error.	1. Another user may have joined the call and touched **Recall.** Instruct the user to redial the call.
2. Communications system is not well grounded.	2. Calls may be dropped if the communications system is not connected to a good building ground via the ac outlet. Verify that the system is connected to a good third-wire (green wire) ground.

Symptom: MERLIN system interferes with television reception.

Possible Cause	***Recommended Action***
Control unit is too close to the television.	Follow these steps to improve television reception: a. Reorient the television antenna. b. Plug the control unit and the television receiver into different outlets so they are on different branch circuits. The control unit should be connected to a good third-wire (green wire) ground. c. Increase the distance between the control unit and the television, antenna, and lead-in wires. Place the control unit in a remote location, such as the basement. d. If necessary, consult the equipment supplier, television dealer, or an experienced radio/television technician for additional suggestions. A booklet prepared by the Federal Communications Commission may be helpful: “How to Identify and Resolve Radio-TV Interference Problems.” It is available from the U.S. Government Printing Office, Washington, DC 20402, Stock No. 004-000-00345-4.

Customer Instruction Booklets

CIB 2852: (7302 H01) 5-Button Voice Terminal (3160)
CIB 2853: (7303 H01) 10-Button Voice Terminal (3161)
CIB 2854: (10A) 5- and 10-Button Voice Terminal Fixed Desk Stand (32004)
CIB 2855: (11A) 10-Button Voice Terminal Adjustable Desk Stand (32002)
CIB 2856: (201A) 10-Button Voice Terminal Wall Mount (32001)
CIB 2858: (103A) Customer-Installable Jack (32601)
CIB 2859: (742D) Connecting Block
CIB 2860: (700A8) Modular Plug
CIB 2861: (451A) Modular Extension Adapter
CIB 2863: (267C) Two-Line Adapter (61400)
CIB 2864: (S102A) Hands-Free Unit (3163)
CIB 2865: (7305 H01) 34-Button Voice Terminal (3162)
CIB 2866: (335A) Auxiliary Power Unit (3165)
CIB 2867: (502A) Headset Adapter (3164)
CIB 2870: (150A) Music-on-Hold Cartridge Type II (6101)
CIB 2871: (151A) Music-on-Hold/Paging Cartridge Type II (6102)
CIB 2872: (170A) Extra-Alert/2-Line Power Failure Cartridge Type III (6103)
CIB 2885: (14A) 5-Button Voice Terminal Fixed Desk Stand and Wall Mount (32000)
CIB 2886: (11C) 34-Button Voice Terminal Adjustable Desk Stand (32003)
CIB 2887: (203A Stand) 34-Button Voice Terminal Wall Mount (32006)
CIB 2888: (267A2 and D4CE-50) Line Bridging Adapter Kit (Adapter/Cord) (61401)
CIB 2893: (452A-50) Extra-Alert Control Switch (32630)
CIB 2903: (349A) Acoustic Coupler Adapter
CIB 2923: (346A) Acoustic Coupler Adapter (31710)
CIB 2924: (D181233) Line-Powered Alert Ringer and Parts (61211)
CIB 3000: (7305 H02) 34-Button Deluxe Voice Terminal (3166)
CIB 3002: (Z200A) 2-Line/5-Voice Terminal Module for Model 820 (61219)
CIB 3004: (Z110A) Model 820 Control Unit Installation Kit (6120)
CIB 3006: Wiring Installation Instructions
CIB 3007: (D181282) Adjunct Power Supply for 34-Button Deluxe Voice Terminal (32811)
CIB 3011: (Z111A) Feature Package 2 Cartridge Type I (6104)
CIB 3012: (Z201A) 5-Voice Terminal Expansion Module for Model 820 (6105)
CIB 3029: (Z110B) Model 206 Control Unit Installation Kit (6106)
CIB 3030: (Z110C) Model 410 Control Unit Installation Kit (6110)
CIB 3038: (Z609A) 4-Way Modjack Adapter

(7302 H01) 5-BUTTON VOICE TERMINAL (3160)

The 5-Button Voice Terminal provides access to intercom and outside lines, and to programmable and other button features shown in Figure 1 which may be provided in your communications system.

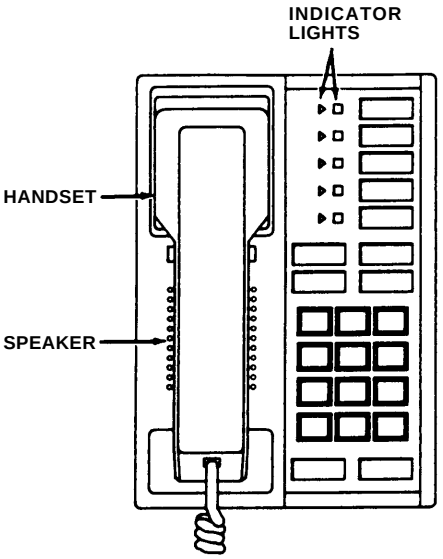

Figure 1

ASSEMBLING YOUR VOICE TERMINAL

1. Unpack voice terminal and coiled handset cord.

2. Turn voice terminal upside down and plug one end of handset cord into jack labeled with the drawing of the handset beside it (see Figure 2).

   Warning: ***Do not plug the handset cord into the jack labeled "LINE".***

3. Plug the loose end of the handset cord into the handset (see Figure 2).

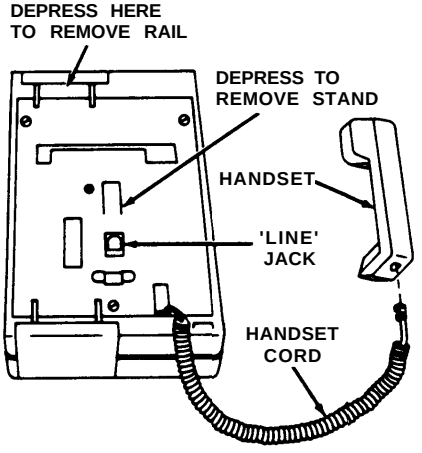

Figure 2

4. Mount the voice terminal on the desk stand or wall mount.

5. To convert the 5-Button Voice Terminal from a desk terminal to a wall-mounted terminal, follow the instructions packed with the wall mount (CIB 2885).

SPEAKER/RINGING AND TEST CONTROL

Test/Program (T/P) Control

The T/P switch is located on the left side of the voice terminal (see Figure 3). It has three positions: T (spring loaded and must be held in the T position), center (indicated by a "dot"), and the P position. It is set to the center position for normal operation of the voice terminal. After connection to the control unit, the voice terminal can be put into the test mode by holding the switch in the T position. The voice terminal can be put into the program mode by placing the switch in the P position.

Speaker/Ring Volume Control

The volume control is located on the left side of the voice terminal (see Figure 3). Sliding the switch away from you increases the volume while sliding it toward you decreases the volume.

Note: The volume control changes the volume of alerting rings, speaker, and button clicks.

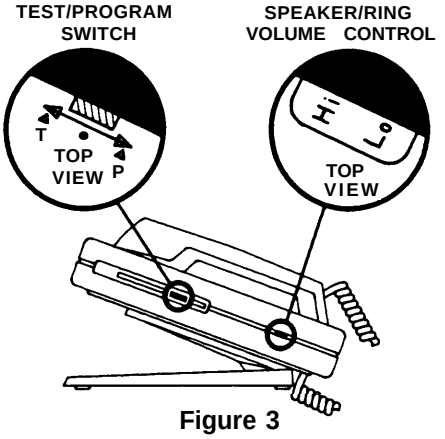

Figure 3

REMOVING AND REPLACING LABELS

The labels on five of the buttons on your voice terminal can be changed.

Removal

1. To remove the voice terminal rail (located above the touch-sensitive buttons):

   - Place your index finger at the center of the rail; slide your finger beneath the set until you feel the ridge immediately in back of the rail.
   - Press this ridge with your finger while cupping the rail in the palm of your hand; pull up to remove the rail (see Figure 4).

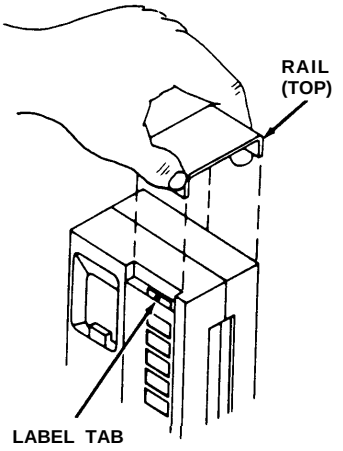

Figure 4

2. Remove the label by pulling the end of the label. (see Figure 5).

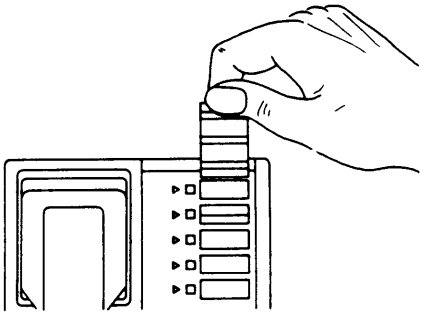

Figure 5

3. Labels may now be typed or handwritten in pencil or ink, and can be erased (if necessary). Be sure the ink is dry before inserting label.

Replacing

1. Insert the bottom of the label into the label slot above the column of touch-sensitive buttons.

2. Slide the label all the way into the slot until the desired typed label appears next to the proper button. (Note that the label slides into the slot and behind a thin top graphics overlay.)

3. Replace the rail.

Equipment manufactured by AT&T Technologies in the U.S.A.

(7303 H01) 10-BUTTON VOICE TERMINAL (3161)

The 10-Button Voice Terminal provides access to intercom and outside lines, and to programmable and other button features shown in Figure 1 which may be provided in your communications system.

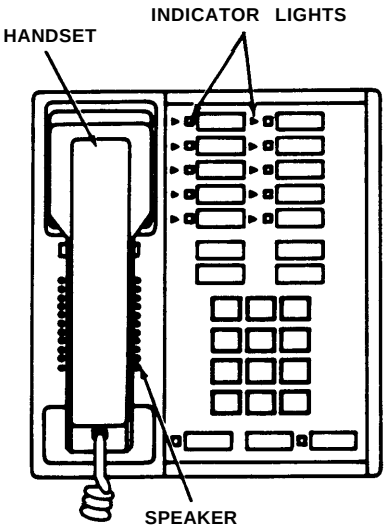

Figure 1

ASSEMBLING YOUR VOICE TERMINAL

1. Unpack voice terminal and coiled handset cord.
2. Turn voice terminal upside down and plug one end of handset cord into jack with the drawing of the handset beside it (see Figure 2).

   Warning: ***Do not plug the handset cord into the jacks labeled "LINE" or "OTHER".***

3. Plug the loose end of the handset cord into the handset (see Figure 2).
4. Mount the voice terminal on the desk stand or wall mount.
5. To convert the 10-Button Voice Terminal from a desk terminal to a wall-mounted terminal, follow the instructions packed with the wall mount (CIB 2856).

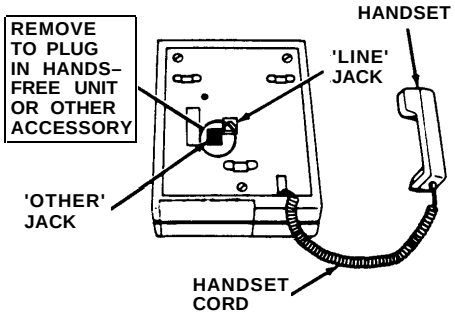

Figure 2

SPEAKER/RINGING AND TEST CONTROL

Test/Program (T/P) Control

The T/P switch is located on the left side of the voice terminal (see Figure 3). It has three positions: T (spring loaded and must be held in the T position), center (indicated by a "dot"), and the P position. It is set to the center position for normal operation of the voice terminal. After connection to the control unit, the voice terminal can be put into the test mode by holding the switch in the T position. The voice terminal can be put into the program mode by placing the switch in the P position.

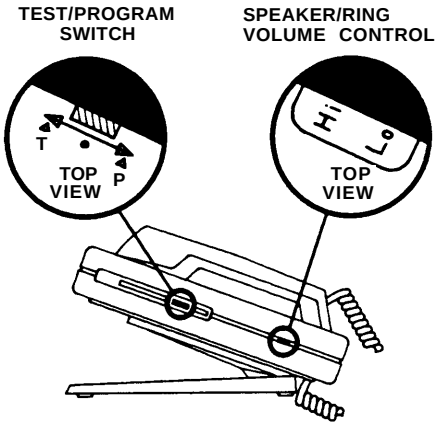

Figure 3

Speaker/Ring Volume Control

The volume control is located on the left side of the voice terminal (see Figure 3). Sliding the switch away from you increases the volume while sliding it toward you decreases the volume.

Note: The volume control changes the volume of alerting rings, speaker, and button clicks.

REMOVING AND REPLACING LABELS

Removal

1. Grasp the silver tab above the touch-sensitive buttons, and pull the label out of the label slot (see Figure 4).
2. Labels may now be typed or handwritten in pencil or ink, and can be erased (if necessary). Be sure ink is dry before inserting label.

Replacing

1. Insert the bottom of the label into the label slot above each column of the touch-sensitive buttons.
2. Slide the label all the way into the slot until the label appears next to the proper button. (Note that the label slides into the slot and behind a thin top graphics overlay.)

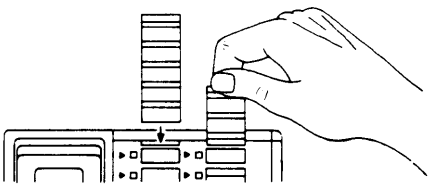

Figure 4

(10A) 5- AND 10-BUTTON VOICE TERMINAL FIXED DESK STAND (32004)

This stand is a fixed mounting base for the 7103, 7302, and 7303 Voice Terminals.

INSTALLATION INSTRUCTIONS

1. Set the handset to one side and turn the voice terminal over.
2. Position the stand on the back of the voice terminal so that the stand's mounting slots fit just below the mounting tabs of the voice terminal (see Figure 1).
3. Install the rubber feet on the stand.

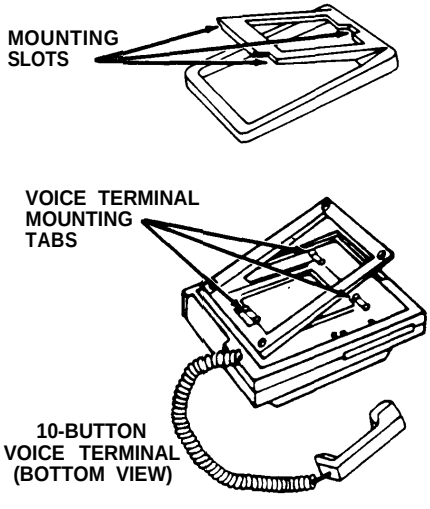

Figure 1

4. Gently slide the stand upward so that the slots fit securely in the three mounting tabs.

REMOVAL INSTRUCTIONS

1. Turn the voice terminal over.
2. Depress the locking tab of the 5-Button Voice Terminal (see Figure 2).

   Note: The 10-Button Voice Terminal does not have a locking tab.

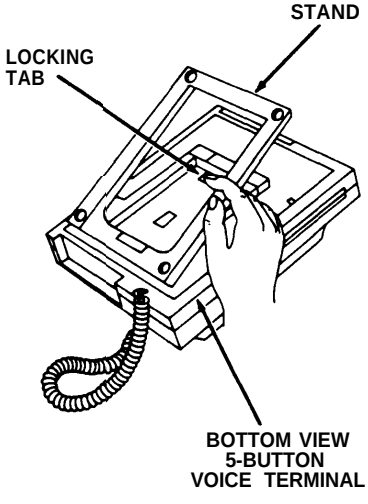

Figure 2

3. Slide the stand downward from the voice terminal mounting tabs.

Instructions For

10A 5- and 10-Button Voice Terminal Fixed Desk Stand (32004)

Equipment manufactured by AT&T Technologies in the U.S.A.

Copyright © 1984 AT&T Technologies
All rights reserved

(11A) 10-BUTTON VOICE TERMINAL ADJUSTABLE DESK STAND (32002)

This desk stand is an adjustable mounting base for the 7103 and 7303 Voice Terminals and provides three angular positions: 8-degree (low), 18-degree (middle), and 28-degree (high).

INSTALLATION INSTRUCTIONS

Note: To avoid pinching your fingers, make certain the adjustable portion of the desk stand is in the lowest position before attempting to install the voice terminal.

1. Set the handset to one side and turn the voice terminal over.

2. Position the stand on the back of the voice terminal so that the voice terminal mounting tabs fit into the mounting slots on the stand (see Figure 1).

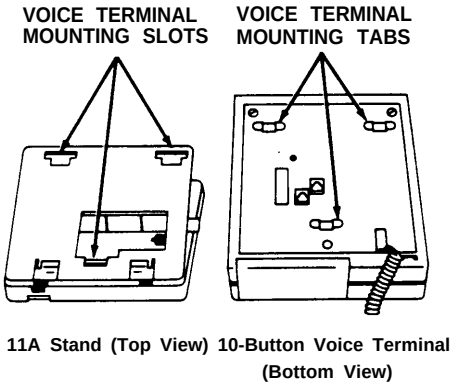

Figure 1

3. Gently slide the stand upward so that the voice terminal tabs fit firmly into the smaller part of the three mounting slots (see Figure 2).

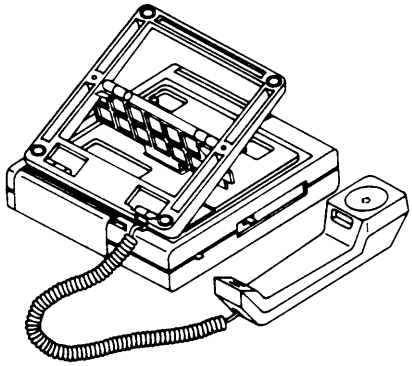

Figure 2

4. The angle of the stand can be adjusted (see Figure 3) by performing the following:

   - Use the forefinger of your left hand to hold the back of the stand firmly to the desk top.

     To RAISE — Using the right hand, slowly lift the rear of the voice terminal until a desired position is reached.

     To LOWER — Using the right hand, lift the rear of the voice terminal to release the locking tension. With the thumb of your left hand, carefully depress the side lever and allow the stand to lower to a desired position.

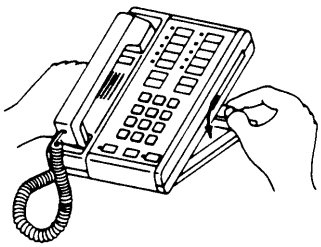

Figure 3

REMOVAL INSTRUCTIONS

To remove the stand from the 10-Button Voice Terminal, slide the stand out of the mounting tabs by pushing the voice terminal upward.

(201A) 10-BUTTON VOICE TERMINAL WALL MOUNT (32001)

This bracket is used to mount 7103 or 7303 Voice Terminals on a wall surface.

INSTALLATION INSTRUCTIONS

Note: Be sure to select a location for installation at least as large as the voice terminal; the 201A Wall Mounting is slightly smaller than the terminal itself.

1. Select the wall mounting location; using the wall mount as a template, mark the four mounting hole locations (two upper slots and two lower holes). See Figure 1.

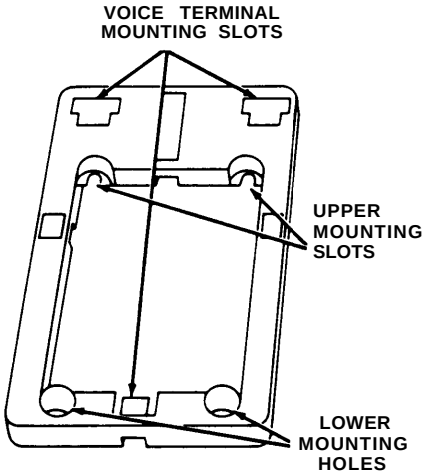

Figure 1

2. Select proper toggler for wall thickness or wall type:
   - For walls 3/8- to 1/2-inch thick, select the smaller of the two sizes provided.
   - For walls 5/8- to 3/4-inch thick, select the larger of the two sizes provided.
   - For solid walls, either of the two sizes may be used.
3. Drill four holes at the four toggler mounting locations, using a 5/16-inch diameter drill.
4. Fold toggler (see Figure 2A).
5. Insert a toggler in each of the mounting locations, and tap each toggler flush to wall (see Figure 2B).
6. Pop the anchor open with the red key — do not hammer the key (see Figure 2C).
7. Insert and partly thread the top two screws into the starter holes of the togglers (see Figure 2D).
8. Position the two upper mounting slots onto the screws and slightly tighten (see Figure 2E).
9. Insert the two remaining screws into the lower mounting holes (see Figure 2E).
10. Tighten all four screws securely.

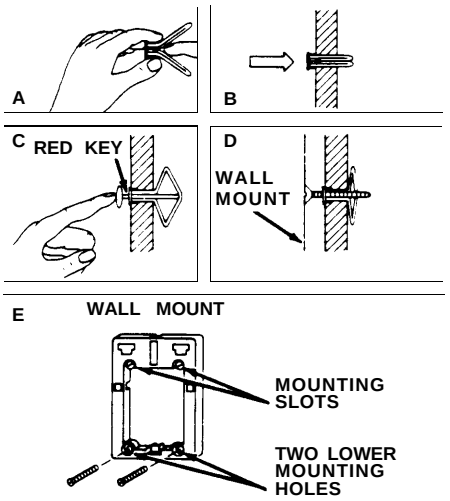

Figure 2

11. Convert the 10-Button Voice Terminal from a desk terminal to a wall-mounted terminal by following the substeps below:
    - Remove the desk stand.
    - Remove the number card retainer and the number card (see Figures 3 and 4).
    - Remove the screw under the number card and lift out the handset retainer from the upper housing. (see Figure 5).
    - Rotate the handset retainer 180 degrees end-over-end (see Figure 6).
    - Replace the handset retainer into upper housing. If properly inserted, a portion of the handset retainer should be projecting into the handset well of the upper housing (see Figure 7).
    - Replace screw.
    - Replace number card and number card retainer.

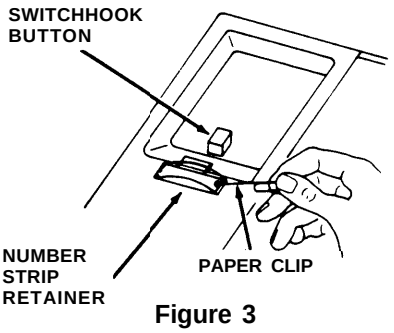

Figure 3

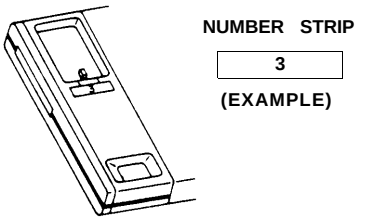

Figure 4

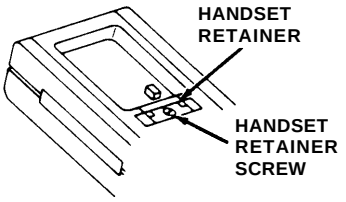

Figure 5

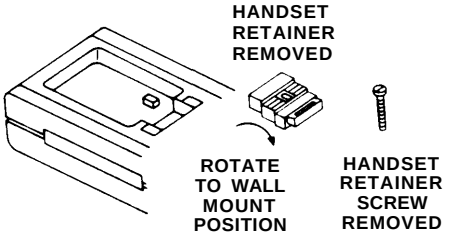

Figure 6

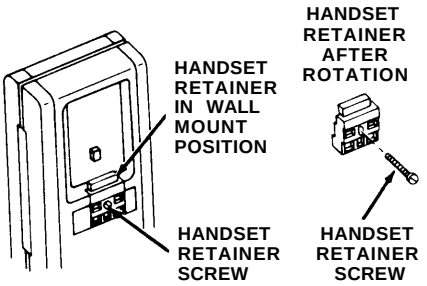

Figure 7

12. Thread one end of the D8W Modular Cord up through the cord slot in the wall mount, and plug the cord into the jack labeled “LINE” on the back of the voice terminal (see Figure 8).

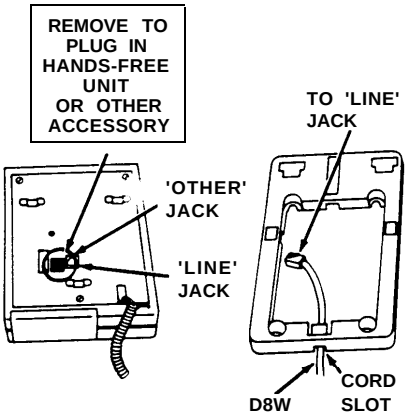

Figure 8

13. Position the back (or bottom) of the voice terminal so the three terminal mounting tabs (Figure 9) fit into the terminal mounting slots.

14. Gently slide the voice terminal downward so the three tabs fit into the smaller part of the corresponding mounting slots (see Figure 10).

15. Plug the loose end of the handset cord into the handset.

16. The installation is complete.

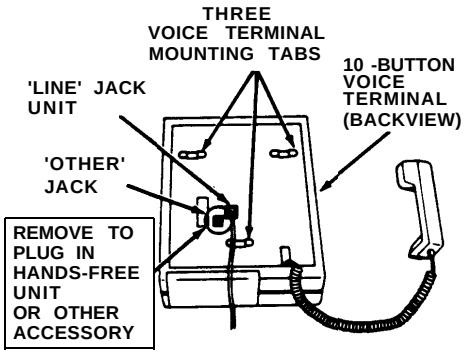

Figure 9

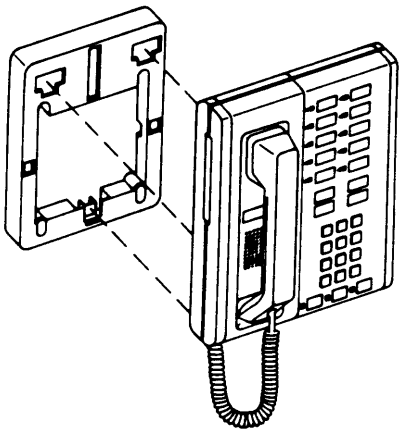

Figure 10

Equipment manufactured by AT&T Technologies in the U.S.A.

Instructions For

201A 10-Button Voice Terminal Wall Mount (32001)

CIB 2856
ISSUE 2

Copyright © 1984 AT&T Technologies
All rights reserved

(103A) CUSTOMER-INSTALLABLE JACK (32601)

The customer-installable jack is used to connect 4-pair DIW cable to a D8-type modular cord.

INSTALLATION INSTRUCTIONS

1. Remove the cover from the customer-installable jack by loosening the screw (see Figure 1). Do not remove the screw from the cover. Set the cover aside until the installation is complete.

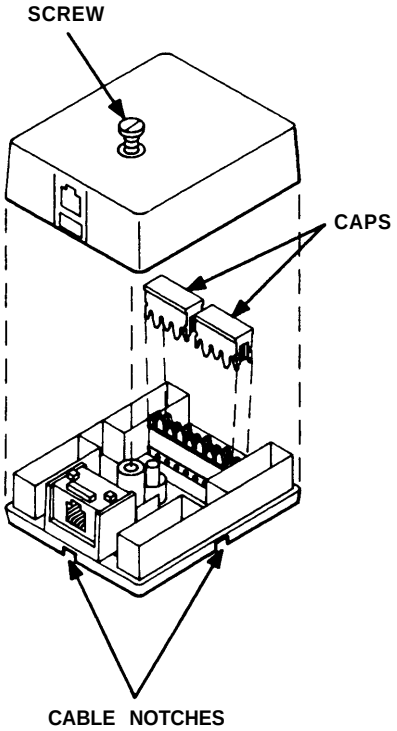

Figure 1

2. Using the cable stripping tool, or equivalent, remove 2 inches of the cover from one end of an 8-conductor cable.

3. From beneath the customer-installable jack base, insert the wire ends of the cable through the hole in the center of the base until about a quarter of an inch of the cable cover extends above the hole (Figure 2).

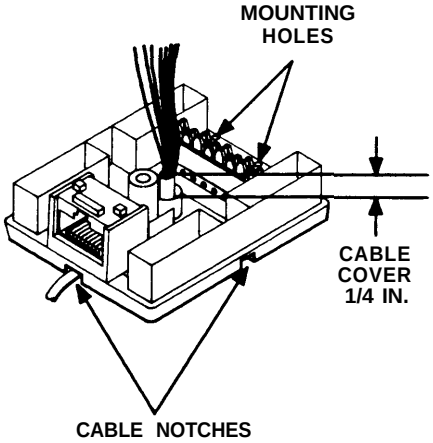

Figure 2

4. Remove the two white plastic caps by pulling them away from the jack; set them aside until Step 6.

5. Insert the wires in the notches in the color sequence shown in Figure 3.

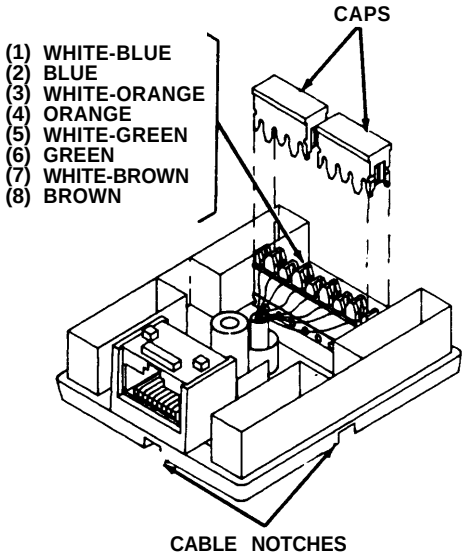

Figure 3

6. Replace each cap by aligning it in position and pressing tightly to make electrical connections.

7. Cut off the loose wire ends with scissors or wire cutters, near the plastic caps, ensuring that the wire ends are not touching each other (Figure 4).

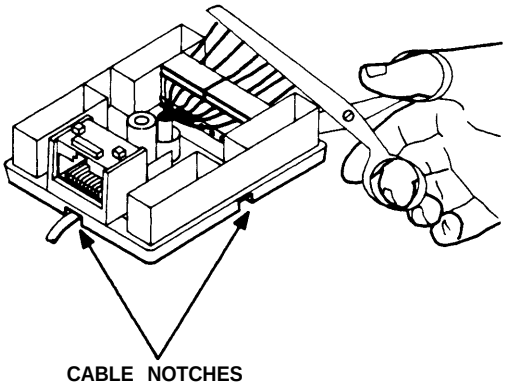

Figure 4

8. Align the cable in one of the notches in the base of the customer-installable jack depending on the direction you want the cable to leave the block (Figure 4).

9. Position the customer-installable jack and mount with appropriate fasteners.

10. Replace the cover on the jack and tighten the screw.

Equipment manufactured by AT&T Technologies in the U.S.A.

(742D) CONNECTING BLOCK

This connecting block joins 8-conductor, 22-24 gauge, inside wire (DIW) cables quickly and easily.

INSTALLATION INSTRUCTIONS

1. Loosen the center screw on the block's cover; remove the cover (see Figure 1).

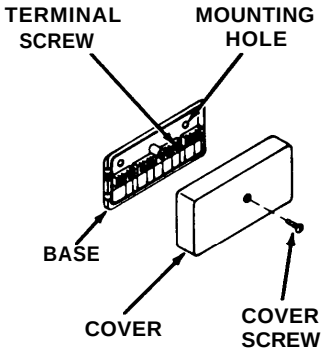

Figure 1

2. Mount the connecting block to the baseboard or wall with appropriate fasteners (screws, adhesive, magnets, etc.).

3. With a pair of pliers, remove a breakout from each side of the connecting block to allow the cables to pass into and out of the connecting block in the directions you want (see Figure 2).

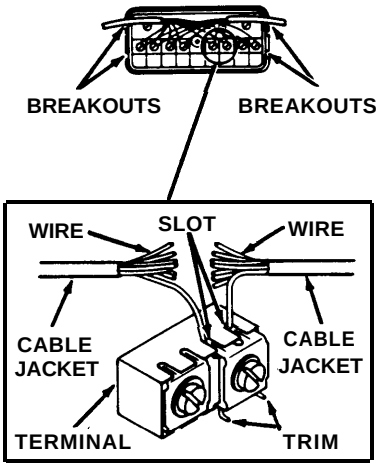

Figure 2

4. Remove about 3 inches of the cable jacket from the end of each cable. Be careful not to damage the insulation on the wires inside the cable jacket. (A special tool for this purpose is available, the 953A Cable Stripper.)

5. Loosen the eight terminal screws.

6. Notice that each terminal has two slots, one for a wire from each cable.

7. Take one of the cables and insert each wire into one slot of the terminal. Bend each wire up to prevent it from slipping out (see Figure 3).

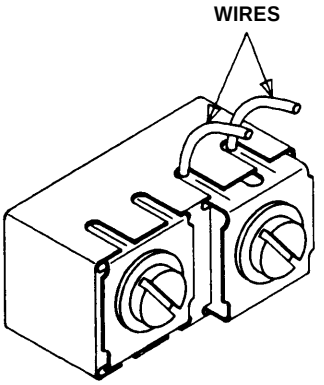

Figure 3

8. Repeat Step 7 for the other cable with the same color wire.

9. Tighten each terminal screw. Trim off excess wire using a wire cutter or scissors.

10. Place the cables in the breakout openings.

11. Replace the cover; tighten the center screw.

Equipment manufactured by AT&T Technologies in the U.S.A.

(700A8) MODULAR PLUG

The modular plug permits an 8-conductor, 22-24 gauge, inside wire (DIW) cable to be plugged into a modular jack.

INSTALLATION INSTRUCTIONS

1. Remove about 3 inches of the cable cover from the cable.

2. Hold the top piece of the plug so that you see the numbers 1 through 8 as shown in Figure 1.

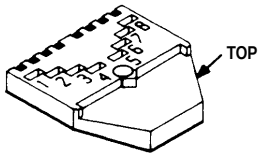

Figure 1

3. Insert the white-orange wire in channel number 1, and bend the wire up in the notch so that the wire does not slide out (see Figure 2).

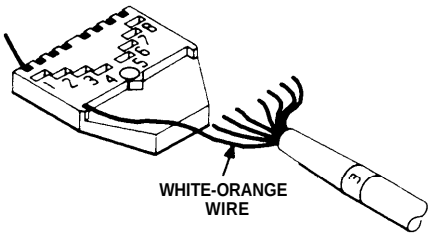

Figure 2

Note: There are two threads among the colored wires (a red one and a white one). You may cut these off to get them out of the way.

4. Insert and bend the remaining wires in their respective channels as you did in Step 3. The sequence of wire colors is coded by number:

(1) White-Orange
(2) Orange
(3) White-Green
(4) Blue
(5) White-Blue
(6) Green
(7) White-Brown
(8) Brown.

5. When you have all eight wires in their correctly numbered holes, ***push*** and ***pull*** on them so that the outer cable cover is close to the sharp plastic edge as shown in Figure 3.

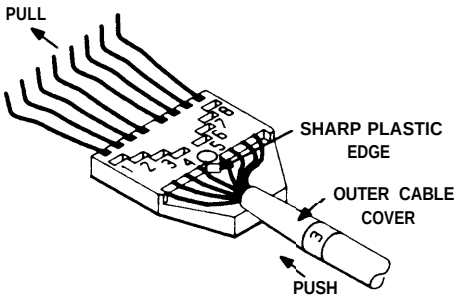

Figure 3

6. While holding the outer cable cover close to the sharp plastic edge, bend all eight wires up again (at the end of each notch) and cut them off close to the edge (see Figure 4).

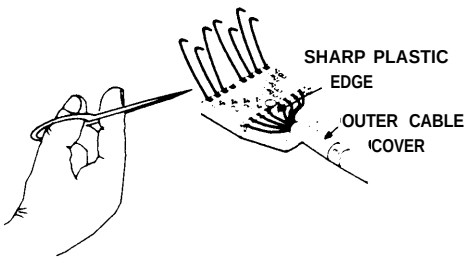

Figure 4

7. Place the bottom piece on a flat surface. Position the top piece on the bottom piece; insert the screw and tighten a few turns to hold the pieces together (see Figure 5).

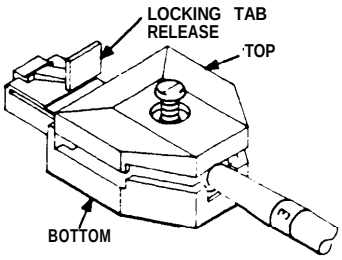

Figure 5

8. Using a pair of pliers, squeeze the two parts together to make both physical and electrical connections (see Figure 6).

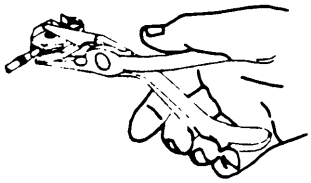

Figure 6

9. Finish tightening the screw to hold the parts together.

CIB 2861

(451A) ADAPTER

The adapter is used to connect a voice terminal cord (D8W) to another voice terminal cord (D8W) or to a voice terminal extension cord (D8AF).

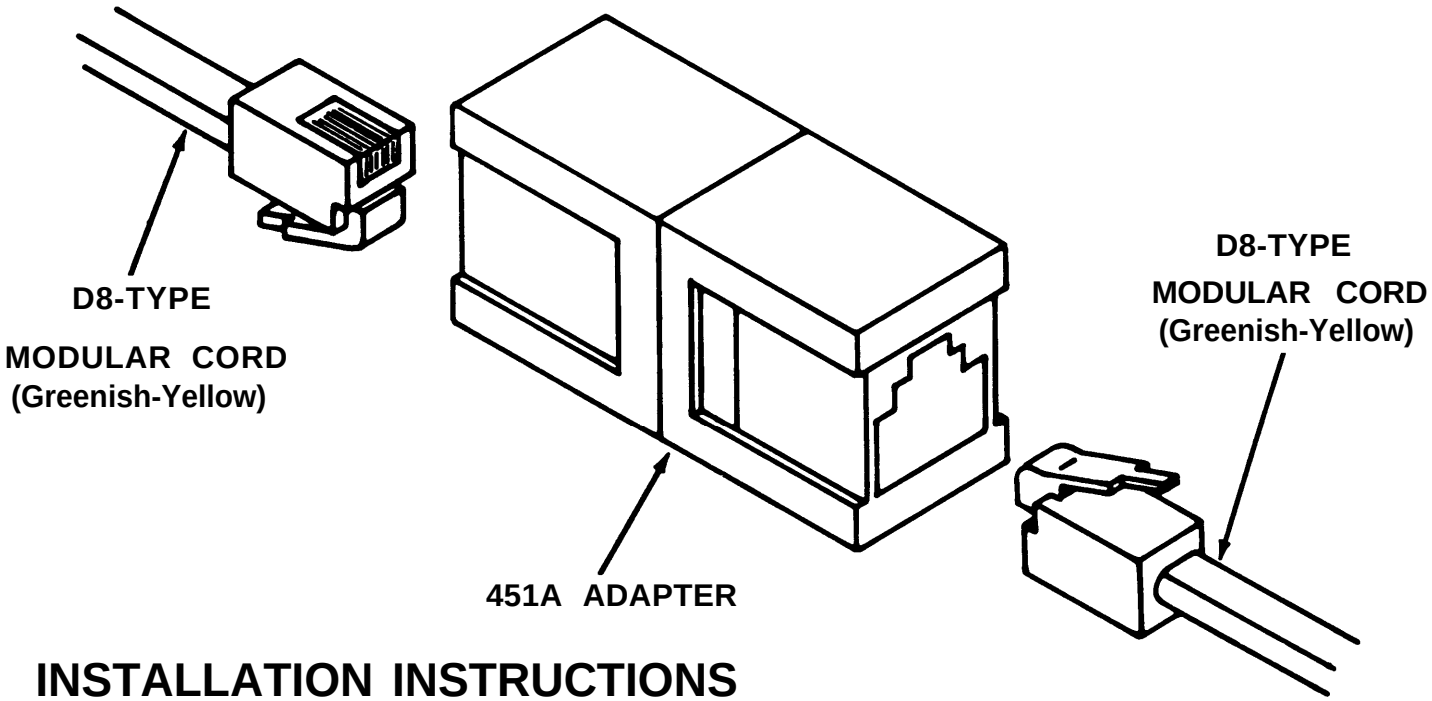

INSTALLATION INSTRUCTIONS

1. Plug one end of each D8-type voice terminal cord into either end of the adapter.

   Caution: ***Used only with voice terminal cords (D8-type). Do not use with line cords (D4-type) since this may cause an interruption of service.***

Equipment manufactured by AT&T Technologies in the U.S.A.

(267C) TWO-LINE ADAPTER (61400)

The two-line adapter is used to connect two line (D4CH) cords to a single network interface (RJ14C) where ***two*** outside telephone lines enter the premises. If you do not know whether you have two outside telephone lines entering at a single network interface, you can ask your Local Telephone Exchange Service Company.

INSTALLATION INSTRUCTIONS

1. Position the adapter so that its plug matches the jack of the network interface. Insert the adapter plug firmly. It should lock with a slight “click”.

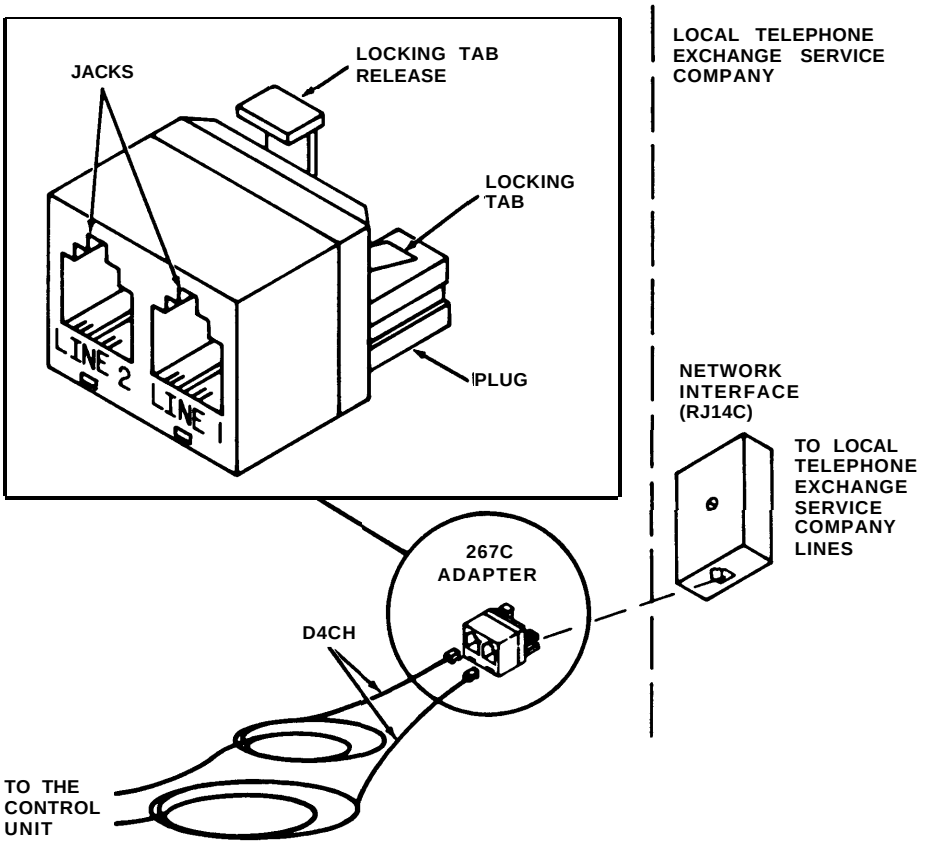

2. The two jacks of the adapter now provide connecting points for two individual modular line (D4CH) cords.

REMOVAL INSTRUCTIONS

1. Hold down the locking tab release and pull the adapter out of the jack of the network interface.

Instructions For
S102A Hands-Free Unit (3163)

(S102A) HANDS-FREE UNIT (3163)

Operation of the Hands-Free Unit (HFU) or speakerphone makes it possible to place and answer both outside and intercom calls without using the handset of the associated voice terminal. The HFU can only be used with 10- and 34-Button Voice Terminals.

INSTALLATION INSTRUCTIONS

1. Place the HFU on the desk or table near the voice terminal to which it will be connected.
2. Using the D8AC Cord supplied with the HFU, connect one end to the rear of the HFU; remove the protective label covering the “OTHER” jack and connect the opposite end to the “OTHER” jack on the bottom of the voice terminal (see Figure 1).

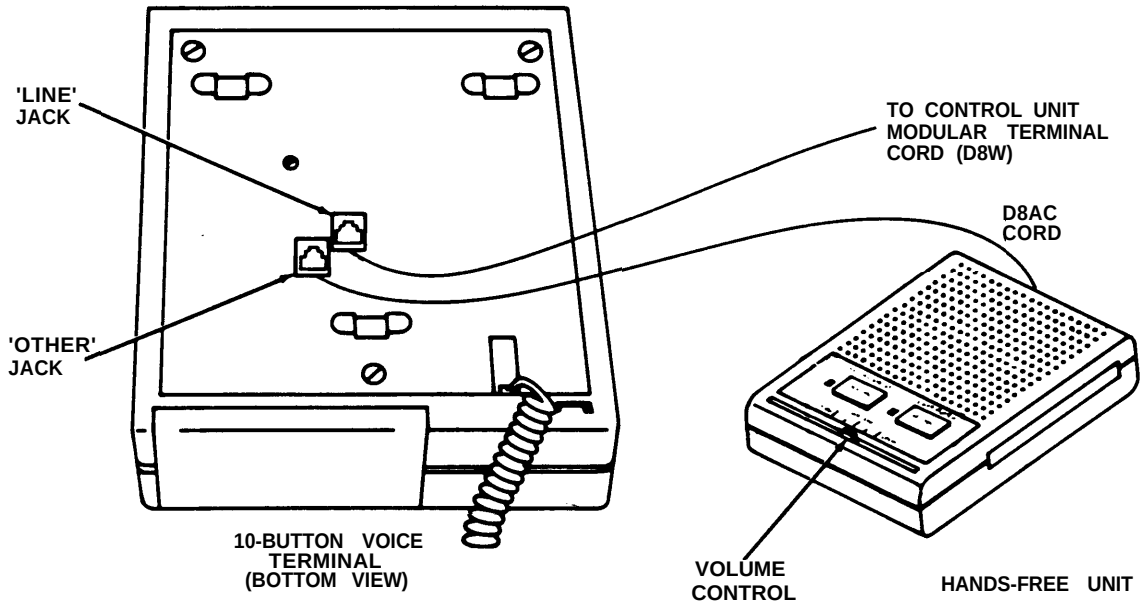

Figure 1

Copyright © 1984 AT&T Technologies
All rights reserved

OPERATING INSTRUCTIONS

1. Leave the handset on the voice terminal.
2. Press the SPEAKERPHONE ON/OFF button. The speakerphone and microphone lights come on (see Figure 2) and you will hear dial tone.
3. Dial the number if placing a call.
4. Begin your conversation.
5. Slide the Volume Control lever for a comfortable listening level (see Figure 2).

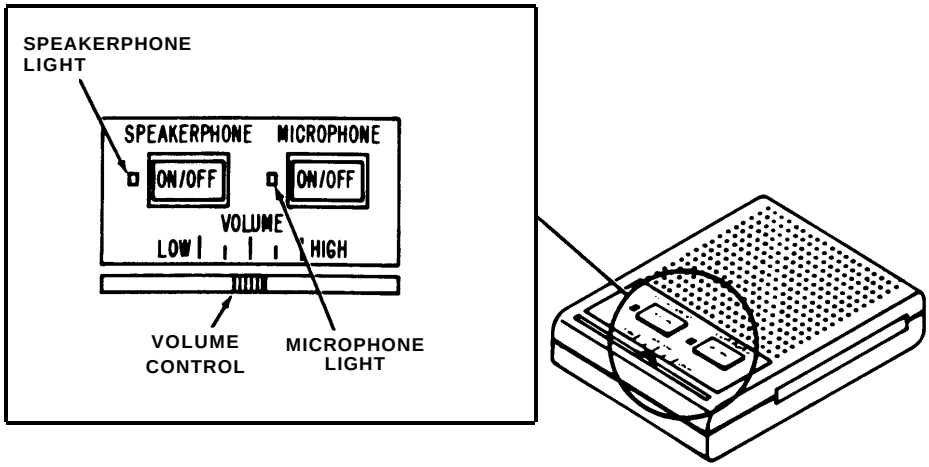

Figure 2

Deactivating Microphone

1. Press the MICROPHONE ON/OFF button. This will prevent the other party from hearing conversation at your end of the call. The microphone light goes off.
2. Press the MICROPHONE ON/OFF button when you again wish to converse with the other party. The microphone light comes on.

Terminating the Call

1. Press the SPEAKERPHONE ON/OFF button.
2. The speakerphone and microphone lights go off.

(7305 H01) 34-BUTTON VOICE TERMINAL (3162)

The 34-Button Voice Terminal provides access to intercom and outside lines, and to programmable and other button features shown in Figure 1 which may be provided in your communications system.

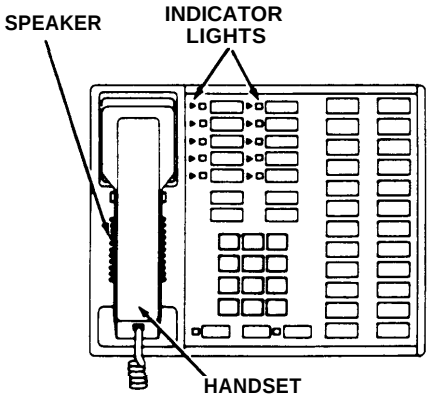

Figure 1

ASSEMBLING YOUR VOICE TERMINAL

1. Unpack voice terminal and coiled handset cord.
2. Turn voice terminal upside down and plug one end of handset cord into jack with the drawing of the handset beside it (see Figure 2).

   Warning: ***Do not plug the handset cord into the jacks labeled "LINE" or "OTHER".***

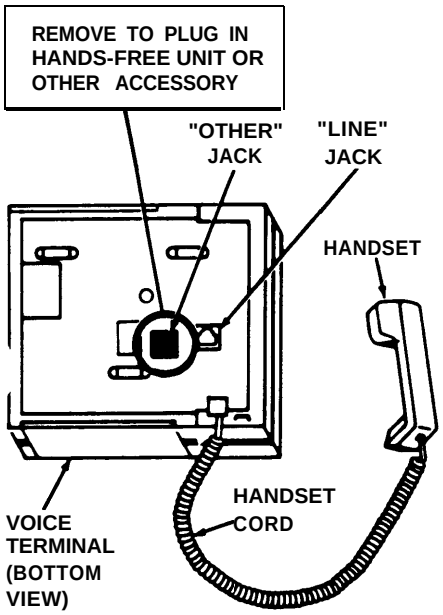

Figure 2

3. Turn the voice terminal right side up.
4. Plug the loose end of the handset cord into the handset (see Figure 2).
5. Position the voice terminal on the desk stand or wall mount.
6. To convert the 34-Button Voice Terminal from a desk terminal to a wall-mounted terminal, follow the instructions packed with the wall mount (CIB 2887).

SPEAKER/RINGING AND TEST CONTROL

Test/Program (T/P) Control

The T/P switch is located on the left side of the voice terminal (see Figure 3). It has three positions: T (spring loaded and must be held in the T position), center (indicated by a "dot"), and the P position. It is set to the center position for normal operation of the voice terminal. After connection to the control unit, the voice terminal can be put into the test mode by holding the switch in the T position. The voice terminal can be put into the program mode by placing the switch in the P position.

Speaker/Ring Volume Control

The volume control is located on the left side of the voice terminal (see Figure 3). Sliding the switch away from you increases the volume while sliding it toward you decreases the volume.

Note: The volume control changes the volume of alerting rings, speaker, and button clicks.

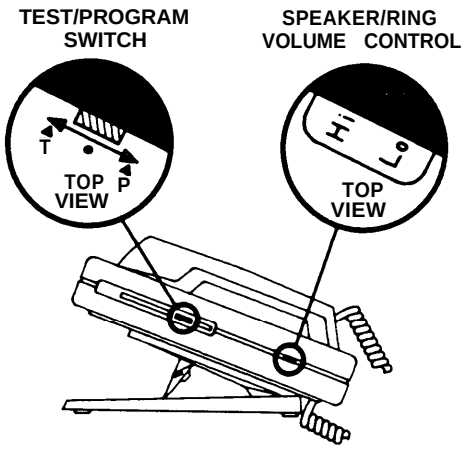

Figure 3

REMOVING AND REPLACING LABELS

Removal

1. Above the touch-sensitive buttons, grasp the silver tab and pull the label out of the label slot (see Figure 4).
2. Labels may now be typed or handwritten in pencil or ink and can be erased (if necessary).

Replacing

1. Insert the bottom of the label into the label slot above each column of the touch-sensitive buttons.
2. Slide the label all the way into the slot until the desired typed label appears next to the proper button. (Note that the label slides into the slot and behind a thin top graphics overlay.)

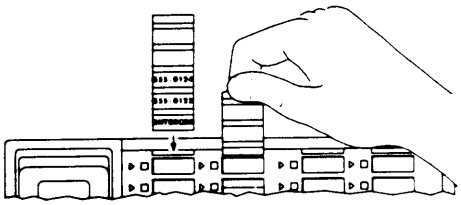

Figure 4

Equipment manufactured by AT&T Technologies in the U.S.A.

(335A) AUXILIARY POWER UNIT (3165)

An auxiliary power unit must be added to your control unit if the total number of voice terminals and voice terminal accessories (hands-free unit, and headset adapters) is greater than the system's capacity. Your system Model 206 supports a total of eight units while Model 410 supports up to fourteen units. The auxiliary power unit kit consists of a 335A Power Unit and parts to provide additional power to the system (see Figure 1).

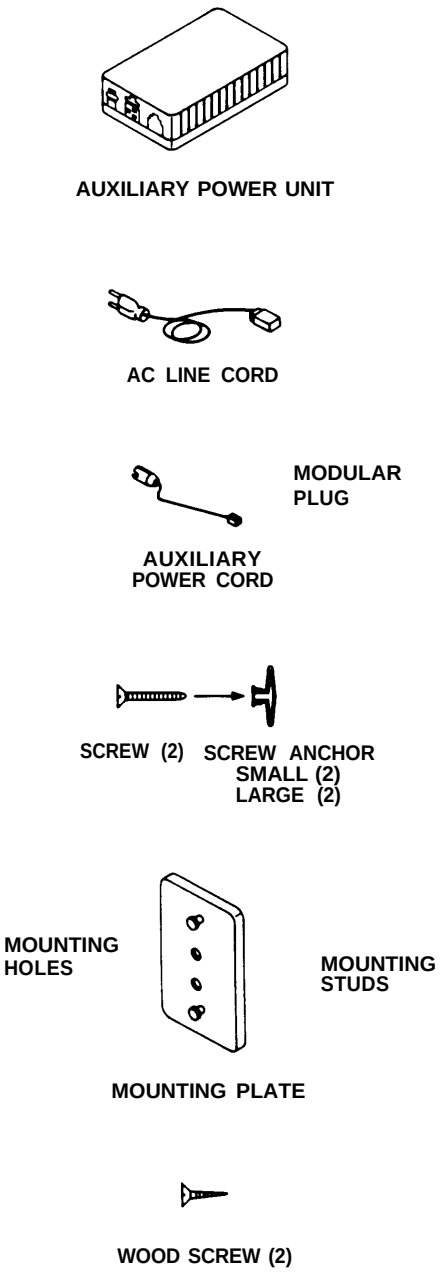

Figure 1

INSTALLATION INSTRUCTIONS

The auxiliary power unit may be surface mounted on a shelf or desk next to the control unit or it may be wall mounted (see Figures 2 and 3). The maximum distance between the power unit and the control unit is determined by the length of the auxiliary power cord (approximately 2 feet) which connects the two units.

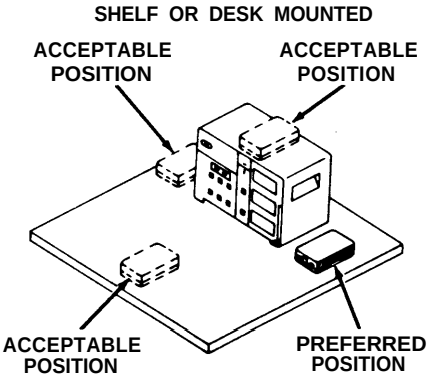

NOTE:
MOUNTING PLATE, SCREWS, AND SCREW ANCHORS NOT REQUIRED.

Figure 2

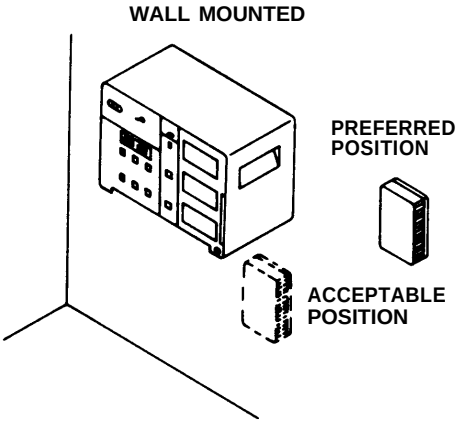

Figure 3

Shelf or Desk Mounting

1. Place the auxiliary power unit in position (Figure 2) on the shelf or desk.
2. Make the necessary connections (see Connections and Figure 5).

WALL MOUNTING INSTRUCTIONS

Mounting on a Wood Surface

1. Locate and mark (using the mounting template) the position of mounting holes.
2. Drill 1/16-inch holes.
3. Install mounting plate in position (Figure 3) using wood screws provided. Tighten screws securely.
4. Align keyholes and studs. Push auxiliary power unit forward and down.

Mounting on a Hollow Wall

1. Locate and mark (using the mounting template) the position of mounting holes.
2. Drill 5/16-inch holes.
3. For 3/8- to 1/2-inch thick wall, use small screw anchor.
4. For 5/8- to 3/4-inch thick wall, use larger screw anchor.
5. Fold screw anchor (see Figure 4A).
6. Insert screw anchor in wall and tap flush (see Figure 4B).
7. Pop the anchor open with the red key — do not hammer key (see Figure 4C).
8. Install the mounting plate in position (Figure 3) using the screws provided. Tighten screws securely (see Figure 4D).
9. Align keyholes of the auxiliary power unit on the mounting plate studs. Push auxiliary power unit forward and down (see Figure 4E).

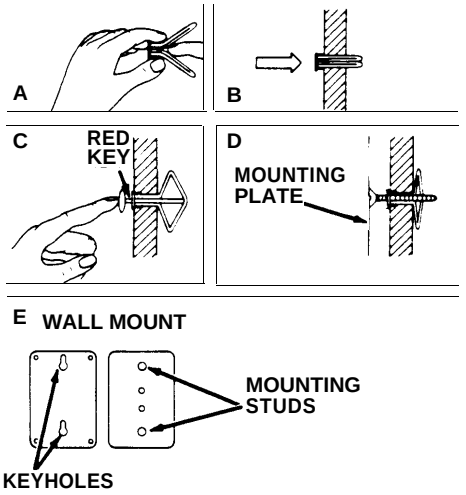

Figure 4

Connections

1. Unplug the control unit power cord from the wall outlet.

2. Plug the control unit power cord into the “AC Output” outlet on the auxiliary power unit.

3. Insert one end of the auxiliary power cord into the jack labeled “Auxiliary Power” on the control unit, and insert the other end into the jack labeled “Auxiliary Power” on the auxiliary power unit.

4. Plug one end of the ac line cord into the opening labeled “AC Input” on the auxiliary power unit, and then plug the other end into the ac wall outlet (see Figure 5).

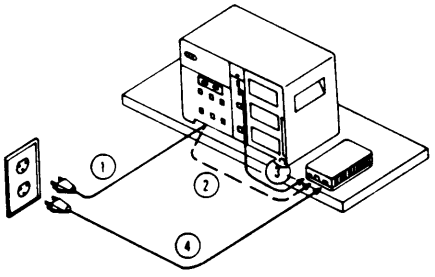

Figure 5

Instructions For

335A Auxiliary Power Unit (3165)

CIB 2866
ISSUE 1

Copyright © 1984 AT&T Technologies
All rights reserved

Equipment manufactured by AT&T Technologies in the U.S.A.

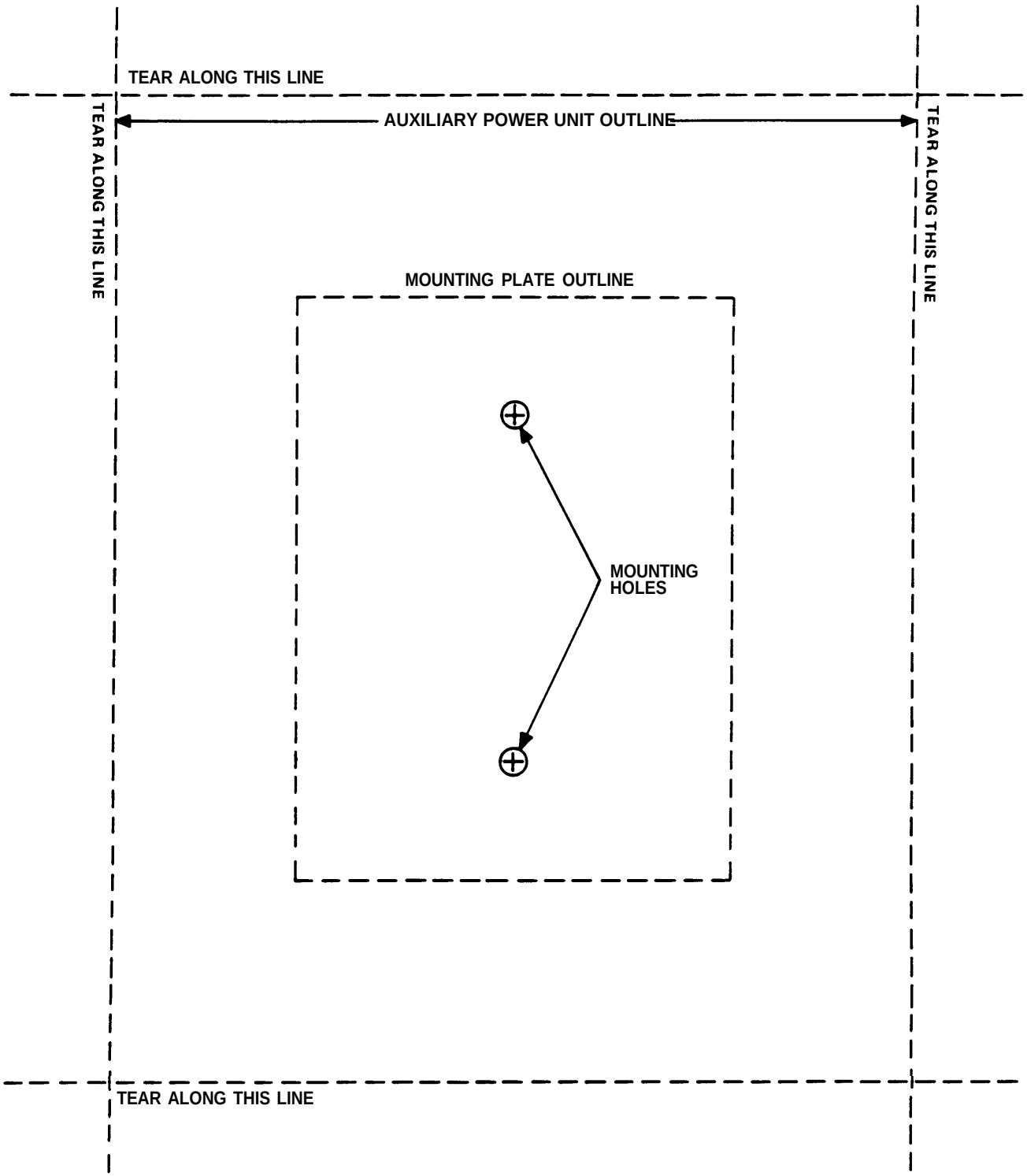
TEAR ALONG THIS LINE
AUXILIARY POWER UNIT OUTLINE
TEAR ALONG THIS LINE
TEAR ALONG THIS LINE
MOUNTING PLATE OUTLINE
MOUNTING
HOLES
TEAR ALONG THIS LINE

(502A) HEADSET ADAPTER (3164)

The headset adapter makes it possible to use a headset with the 10- and 34-Button Voice Terminals.

INSTALLATION INSTRUCTIONS

1. Place the adapter near the voice terminal to which it will be connected (see Figure 1).

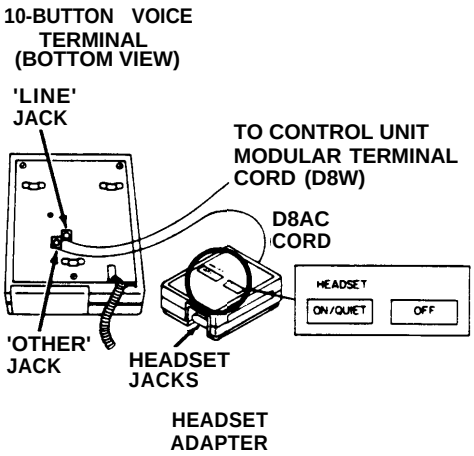

Figure 1

2. If your headset has a modular plug, insert it into the smaller keyed jack on the rear of the adapter (see Figure 2).

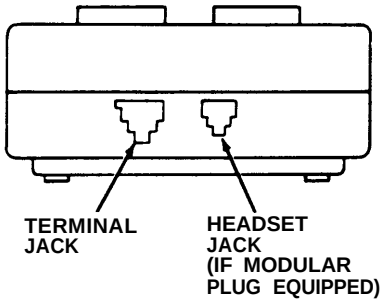

Figure 2

3. If your headset has a 2-prong plug, insert it into the headset jack on the front of the adapter (see Figure 3).

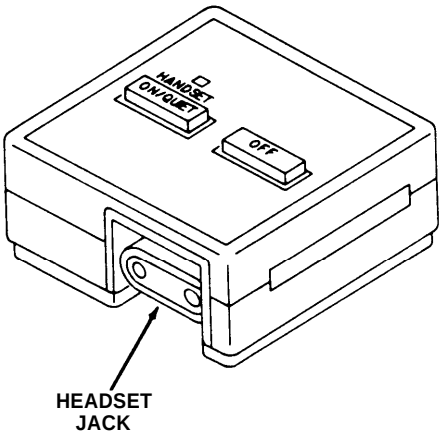

Figure 3

4. On the rear of the adapter, plug one end of the D8AC Cord into the larger keyed jack on the left of the headset.

5. Using the D8AC Cord supplied with the adapter, connect the adapter to the “OTHER” jack on the bottom of the voice terminal (see Figure 4).

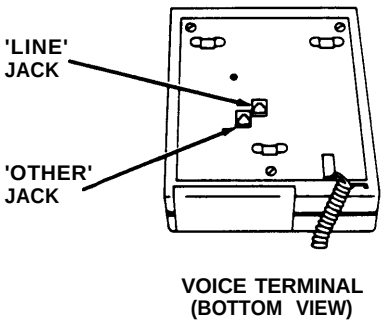

Figure 4

OPERATING INSTRUCTIONS

1. To place a call: press the headset adapter “ON” button and dial the number.

2. To answer a call: press the headset adapter “ON” button.

3. To disconnect (end) a call: press the headset adapter “OFF” button.

4. To switch from handset to headset: press the headset adapter “ON” button and hang up the handset.

5. To switch from headset to handset: pick up handset (headset will automatically go off).

(150A) MUSIC-ON-HOLD CARTRIDGE TYPE II (6101)

This cartridge (Figure 1) is intended for use with Models 206, 410, and 820 of the communications system. When properly connected to a user-provided 2-watt, 8-ohm music source, it provides music to outside callers who are placed on HOLD.

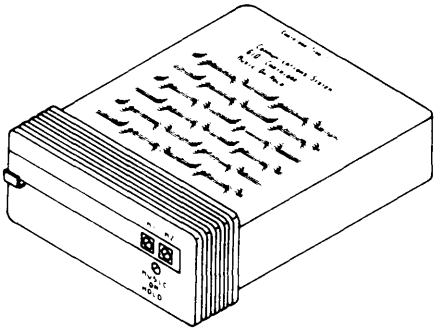

Figure 1

Music Terminals

The "M1" and "M2" terminals, when properly connected to a music source, provide music on hold. They are a dry balanced 8-ohm input; therefore, it is not critical which terminal on the music source is connected to "M1" and which is connected to "M2" (dc offset voltage is assumed to be 0 volts). A maximum of 0.3 volts peak to peak can be provided before the signal is distorted. Protection is provided for larger signals.

Music-on-Hold Volume Control

This terminal is used to adjust the volume of your music on hold. Turning the screw clockwise increases the volume and turning it counterclockwise decreases the volume.

INSTALLATION INSTRUCTIONS

Warning: ***Unplug the control unit from the ac outlet and make sure the control unit green light goes OFF before inserting or removing the cartridge.***

Installing the Cartridge

1. Open the control unit door.

2. Grasp the plastic cover plate in the middle right section of the control unit panel marked Cartridge Type II and pull to remove it as shown in Figure 2.

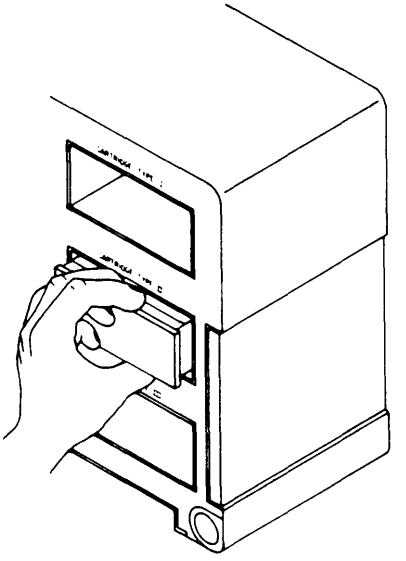

Figure 2

3. Slide the cartridge into the control unit cartridge slot marked Cartridge Type II as shown in Figure 3.

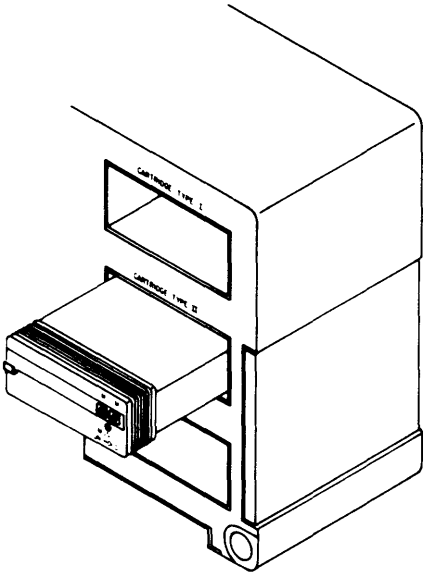

Figure 3

4. Push the cartridge slowly and steadily until the ridge on the front of the cartridge is aligned with the front panel of the control unit.

Connecting Your Music Source

Note: This section explains how to connect your music source to the 150A Cartridge by running either 18- or 24-gauge wire from the 8-ohm input of the music source to the "M1" and "M2" terminals on the cartridge.

Warning: ***Unplug the power cords of the control unit and the music source from the ac outlet before making any connections to the cartridge.***

1. Wrap the end of one wire around an 8-ohm output terminal screw on your music source. Take the same end of a second wire and wrap it around the other terminal screw associated with the 8-ohm output on your music source. Tighten the screws.

   Note 1: The music source should be tested with speakers before making the connections to the music on hold. The ac power should be disconnected from the music source before making any connections.

   Note 2: The same 8-ohm output cannot be connected to a speaker and the music-on-hold cartridge. Since the amplitude required to drive a speaker is much greater than the music-on-hold input will accept, it causes the music on hold to be distorted.

2. Loosen but do not remove the two terminal screws marked M1 and M2.

3. Take each wire from the output of the music source and loop it clockwise around a terminal screw (Figure 4). Again, it is not critical which wire goes to "M1" and which goes to "M2".

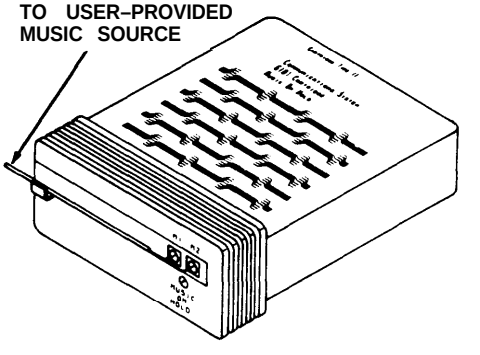

Figure 4

4. Tighten the screws.

5. Plug the control unit power cord into a 117-volt ac electrical outlet not controlled by a switch.

6. Plug the music source into a 117-volt ac electrical outlet; turn it on and set the volume control.

7. Within your system, call from one line to another and have someone answer the called line.

8. Place the call on hold. The held party should now hear the music.

9. With a screwdriver, adjust the volume to a desired level by slowly turning the screw above the "Music-on-Hold" designation on the cartridge.

10. Arrange the wires neatly.

11. Close the control unit door.

Note: The Federal Communications Commission requires that signals be limited in loudness, if your music on hold sounds distorted, your music input may be too loud. Turn the volume down on your music source. If this does not correct the problem, call the HELP number listed in the User's Guide or Service Manual.

Instructions For

150A Music-on-Hold Cartridge (Type II) (6101)

CIB 2870
ISSUE 2

Equipment manufactured by AT&T Technologies in the U.S.A.

Copyright © 1984 AT&T Technologies
All rights reserved

(151A) MUSIC-ON-HOLD/PAGING CARTRIDGE TYPE II (6102)

This cartridge (Figure 1) is intended for use with the communications system, and provides three functions:

- When properly connected to a user-provided 2-watt, 8-ohm music source, it provides music to outside callers who are placed on HOLD.
- When properly connected to a loudspeaker paging system, it permits users to make paging announcements over the loudspeaker from their voice terminals.
- It can also provide background music over the loudspeaker paging system.

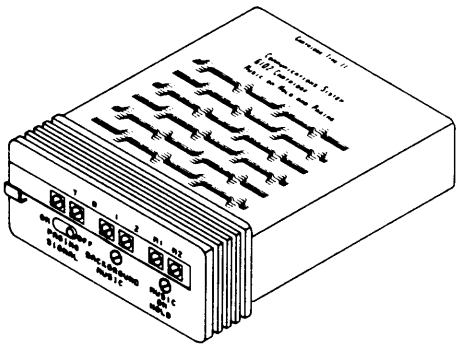

Figure 1

"T" and "R" Terminals

The "T" and "R" terminals on the cartridge connect to the "telephone" input on your paging system. The connection allows you to access the paging system via the intercom from any voice terminal. The "T" and "R" terminals are a 600-ohm, dry balanced output; therefore, it is not critical which of the two terminals on the paging unit is connected to "T" and which is connected to "R" (dc-offset voltage is assumed to be 0 volts).

Paging Signal Switch

The "Paging Signal" switch provides the following options:

- ON: When switched to the "ON" position, all paging announcements are preceded by a tone.
- OFF: No tone precedes the paging announcement over the loudspeakers.

Control Terminals

The "1" and "2" terminals on the cartridge can be used for signaling the paging system when a page is in progress (for example, to turn off background music). The "1" and "2" terminals are switched contacts that are normally open but become closed when a page is initiated. A maximum of 40 volts, 0.25 amperes can be applied across the terminals.

Background Music Volume Control

This control is used to adjust the volume of your background music. Turning the screw clockwise increases the volume, turning it counterclockwise decreases the volume.

Note: You may also have volume controls on your speakers and paging system.

Music Terminals

These terminals when properly connected to a music source, allow you to have music on hold, and if desired, background music on your paging system. "M1" and "M2" are a dry balanced 8-ohm input; therefore, it is not critical which terminal on the music source is connected to "M1" and which is connected to "M2" (the dc-offset is assumed to be 0 volts). A maximum of 0.3 volts peak to peak can be applied across these terminals before the signal is distorted. Protection is provided for larger signals.

Music-on-Hold Volume Control

This control is used to adjust the volume of your music on hold. Turning the screw clockwise increases the volume and turning it counterclockwise decreases the volume.

INSTALLATION INSTRUCTIONS

Warning: ***Unplug the control unit from the ac outlet and make sure the control unit green light goes OFF before inserting or removing the cartridge.***

Installing the Cartridge

1. Open the control unit door.
2. Grasp the plastic cover plate in the middle right section of the control unit panel marked Cartridge Type II and pull to remove it as shown in Figure 2.

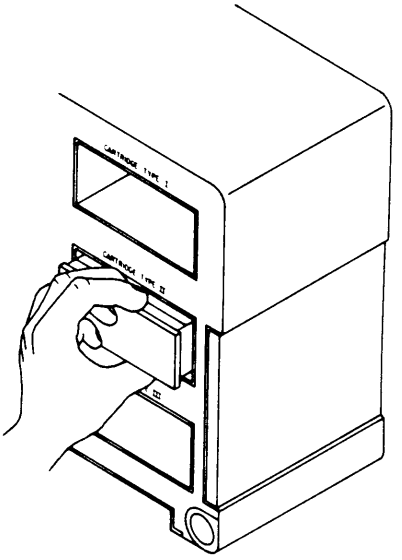

Figure 2

3. Slide the cartridge into the control unit cartridge slot marked Cartridge Type II as shown in Figure 3.

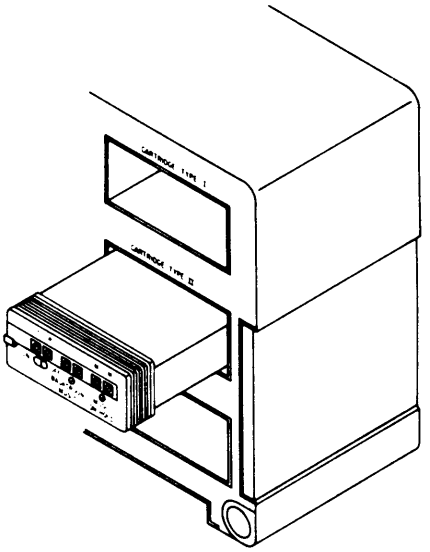

Figure 3

4. Push the cartridge slowly and steadily until the ridge on the front of the cartridge is aligned with the front panel of the control unit.

Connecting Your Music Source

Note: This section explains how to connect your music source to the 151A Cartridge by running wire (18, 22, or 24 gauge)

from the 8-ohm output of the music source to the “M1” and “M2” terminals on the cartridge.

Warning: ***Uplug the power cords of the control unit and the music source from the ac outlet before making any connections to the cartridge.***

1. Wrap the end of one wire around the 8-ohm output terminal screw on your music source. Take the same end of the second wire and wrap it around the other terminal screw associated with the 8-ohm output. Tighten the screws.

   Note 1: The music source should be tested with speakers before making the connections to the music on hold. The ac power should be disconnected from the music source before making any connections.

   Note 2: The same 8-ohm output cannot be connected to a speaker and the music-on-hold cartridge. Since the amplitude required to drive a speaker is much greater than the music on hold will accept, it causes the music on hold to be distorted.

2. Loosen but do not remove the two terminal screws marked M1 and M2.

3. Take each wire from the output of the music source and loop it clockwise around a terminal screw (Figure 4). Again, it is not critical which wire goes to “M1” and which goes to “M2”.

4. Tighten the screws.

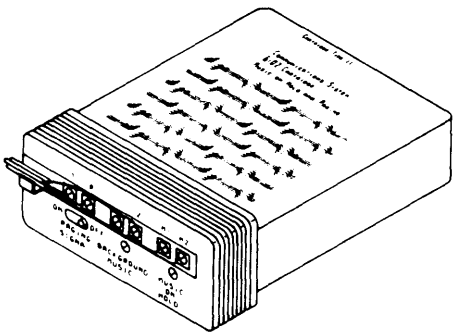

Figure 4

Connecting Your Paging

Note: This section explains a typical installation of a paging unit. Consult your vendor’s instructions for your particular paging unit and the description of the cartridge to determine how to install your paging system to best suit your needs.

Warning: ***Be sure your control unit is unplugged from the ac outlet before making any connections.***

1. Loosen the terminal screws marked “T” and “R” on the cartridge.

2. Strip the ends of a pair of 24-gauge wires and wrap them clockwise around each of the terminal screws and tighten.

3. Attach the other ends of the wires to the 600-ohm input attachment on your paging unit. This input may be labeled “telephone input”.

   Note: If your paging unit does not have a 600-ohm input, you will need to attach a “high impedance to 600-ohm” impedance matching device.

4. Set the slide switch labeled “Paging Signal” on the cartridge to ON or OFF to turn the paging prealert tone on or off, as desired.

Installations Requiring Switched Contact Closures

Some paging units require a switched contact closure to operate correctly. Consult your paging unit vendor’s instructions for your system to determine if your system require this.

If it does, follow the steps below to connect the land 2 terminals on the cartridge to the switched contact closure connection on your paging unit.

1. Loosen the crews marked “1” and “2” on the cartride.

2. Wrap a 24 guage wire around each of the terminals.

3. Attach the other end of each wire to the switched contact closure connection on your paging unit.
4. Plug the control unit power cord into a 117-volt ac electrical outlet not controlled by a switch.

5. Plug the music source into a 117-volt ac electrical outlet; turn it on and set the volume control.

6. Within your system, call from one line to another and have someone answer the called line.

7. Place the call on hold. The held party should now hear the music.

8. With a screwdriver, adjust the music volume to a desired level by slowly turning the screw above the “Music-on-Hold” designation on the cartridge.

   Note: The Federal Communications Commission requires that signals be limited in loudness. If your music on hold sounds distorted, it may be too loud. Turn the volume down on your music source. If this does not correct the problem, call the HELP number listed in the User’s Guide or Service Manual.

9. Adjust the background music volume by turning the screw above the “Background Music” on the cartridge.

   Note: To eliminate background music, turn the screw counterclockwise as far as it will go.

10. Call the paging system from one of the voice terminals by pressing “Intercom”, dialing “6”, and speaking into the handset.

11. Adjust the volume of the paging unit by using the controls on your paging unit and speakers.

    Note: If your paging unit controls the volume of your music source, you may have to adjust the volume to a suitable loudness.

12. Arrange the wires neatly.

13. Close the control unit door.

Instructions For

151A Music-on-Hold/ Paging Cartridge (Type II) (6102)

CIB 2871
ISSUE 2

Copyright © 1984 AT&T Technologies
All rights reserved

(170A) EXTRA-ALERT/2-LINE POWER FAILURE CARTRIDGE TYPE III (6103)

This cartridge (Figure 1) is intended for use with the Models 206 and 410 communications system, and provides two separate functions. When properly connected to an external alerting device (e.g., bell or horn), it provides a loud ringer for noisy or remote locations. The alert sounds whenever an outside line rings. The cartridge also contains **two** jacks for plugging in standard modular telephones (desk models) that can be used during a commercial power failure.

Note: Certain older external alerts require a 452A Control Switch.

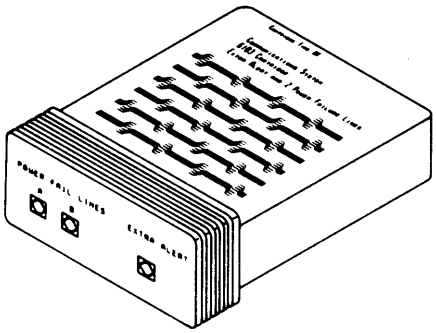

Figure 1

INSTALLATION INSTRUCTIONS

Warning: Unplug the control unit from the ac outlet before inserting or removing the cartridge.

1. Open the control unit door.
2. Grasp the plastic cover plate in the bottom right section of the control unit panel marked Cartridge Type III and pull to remove it as shown in Figure 2.
3. Slide the cartridge into the control unit cartridge slot marked Cartridge Type III as shown in Figure 3.
4. Push the cartridge slowly and steadily until the ridge on the front of the cartridge is aligned with the front panel of the control unit.

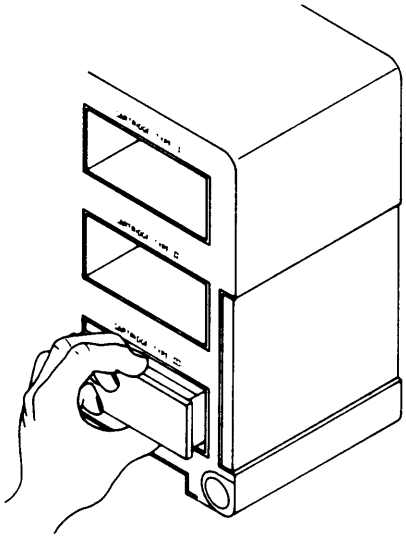

Figure 2

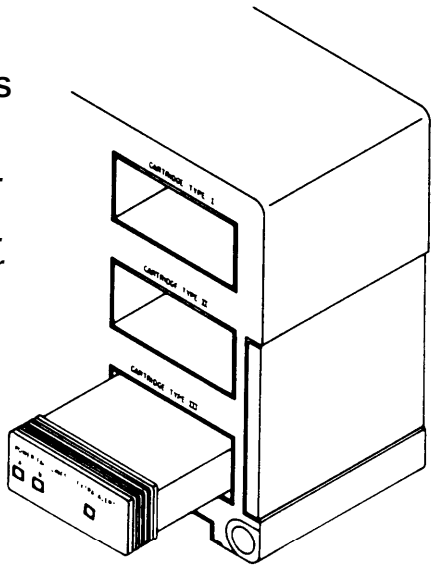

Figure 3

5. Plug the control unit power cord into a 117-volt ac electrical outlet not controlled by a switch.
6. Insert the modular plug from your standard modular power failure telephone(s) into the modular jack connector(s) A or B on the cartridge under the panel marked Power Fail Lines.

   Warning: Do NOT plug electronic voice terminals into these jacks.

7. Remove the plastic hole plug from the Extra-Alert jack on the cartridge and plug the modular cords (D4CH) into the Extra-Alert jack.
8. Install the extra alert according to the instructions packed with the component.
9. Close the control unit door.

Equipment manufactured by AT&T Technologies in the U.S.A.

(14A) 5-BUTTON VOICE TERMINAL FIXED DESK STAND AND WALL MOUNT (32000)

This bracket supports a 7302 Voice Terminal either on a desk or mounted on a wall.

The original package contains:

- The desk stand/wall mount (unassembled).
- Fasteners and screws appropriate for wall mounting.

The pieces of the desk stand/wall mount come attached to a disposable runner (see Figure 1). The WALL SUPPORT and DESK SUPPORT designations are imprinted on the appropriate plastic part. Separate assembly instructions are provided for each application. Skip to the appropriate "Instruction" section and proceed.

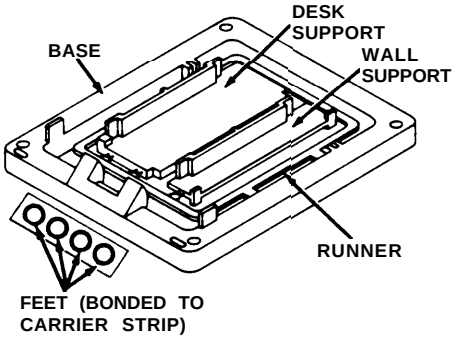

Figure 1

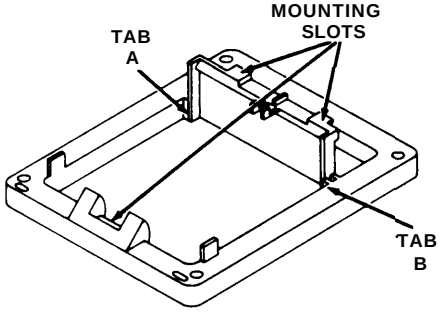

Figure 2

DESK STAND ASSEMBLY AND INSTALLATION

1. Break the pieces away from the runner.
2. Locate the DESK SUPPORT and BASE pieces. File the rough edges off the pieces where they were attached to the runner.
3. Peel the self-stick feet off the carrier strip, and press them into position at the corners of the base.
4. Set the base on its feet.
5. Insert Tabs A and B of the desk support into Slots A and B of the base (see Figure 2).
6. Turn the voice terminal over and rest it on a desk or table.
7. Position the stand on the voice terminal so that the stand's mounting slots fit just below the mounting tabs of the voice terminal.
8. Gently slide the stand upward so that the voice terminal tabs fit securely in the three mounting slots on the stand. Press down on the stand to depress the locking tab.
9. Turn the voice terminal over and place on desk or table (see Figure 3).

WALL MOUNT ASSEMBLY AND INSTALLATION

Assembly Instructions

1. Break the pieces away from the runner.
2. Locate the WALL SUPPORT and BASE pieces. File the rough edges off the pieces where they were attached to the runner.
3. Place the base upside down on a table or desk.
4. Insert Tabs A and B of the wall support into Slots A and B on the base.
5. Lift base and push wall support through slots until it clicks into place (see Figure 4).

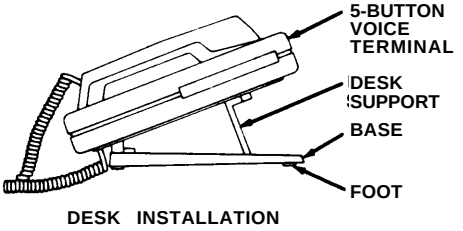

Figure 3

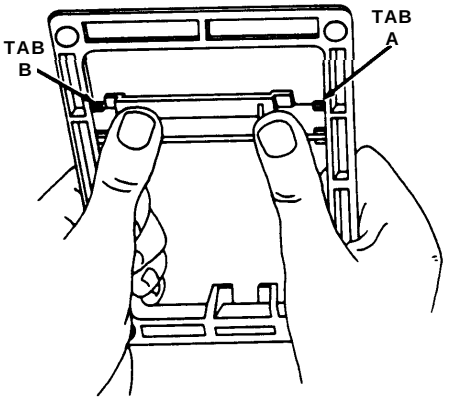

Figure 4

Installation Instructions

Note: Be sure to select a location for installation at least as large as the voice terminal.

1. Select the Installation location: using the bracket as a template, mark the four mounting screw locations.
2. Select proper toggler for wall thickness or wall type:
   - For walls 3/8-inch to 1/2-inch thick, select the smaller of the two sizes provided.
   - For walls 5/8-inch to 3/4-inch thick, select the larger of the two sizes provided.
   - For solid walls, either of the two sizes may be used.
3. Drill four holes at the four toggler mounting locations, using a 5/16-inch diameter drill.
4. Fold and insert a toggler (Figure 5A) in each of the mounting locations. Tap each toggler flush to wall (Figure 5B).

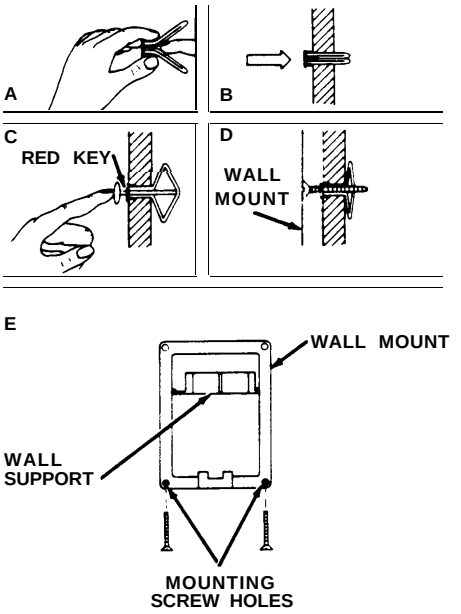

Figure 5

5. Pop the anchor open with the red key — do not hammer the key (see Figure 5C).
6. Using a small drill bit, enlarge the four mounting holes in the wall mount.
7. Insert the top two screws into the wall mount and partially thread the screws into the starter holes of the togglers (Figure 5D).
8. Insert the two remaining screws into the lower mounting holes (see Figure 5E).
9. Tighten all four screws securely.

10. Convert the 5-Button Voice Terminal from a desk terminal to a wall-mounted terminal by following these steps:
    - Remove the number card retainer and the number card (see Figure 6).
    - Remove the screw under the number card and lift out the handset retainer from the upper housing (see Figure 7).
    - Rotate the handset retainer 180 degrees end-over-end (see Figure 8).
    - Replace the handset retainer into the upper housing. If properly inserted, a portion of the handset retainer should be projecting into the handset well of the upper housing (see Figure 9).
    - Replace screw.
    - Replace number card and number card retainer.

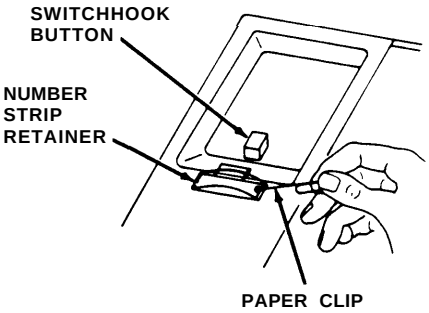

Figure 6

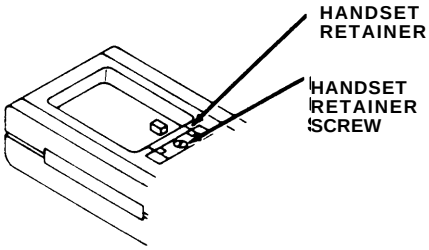

Figure 7

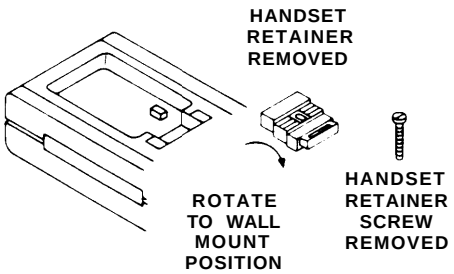

Figure 8

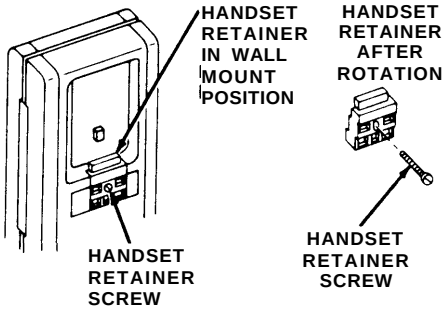

Figure 9

11. Thread one end of the D8W Modular Terminal Cord up through the cord slot of the wall mount, and plug into the jack labeled “LINE” on the back of the voice terminal.

12. Position the back (or bottom) of the voice terminal so the mounting slots of the voice terminal fit just above the wall mount’s mounting tabs.

13. Gently slide the voice terminal down so the voice terminal tabs fit securely in the three mounting slots (see Figure 10). Forward pressure must be applied to the voice terminal so the terminal’s locking tab is depressed.

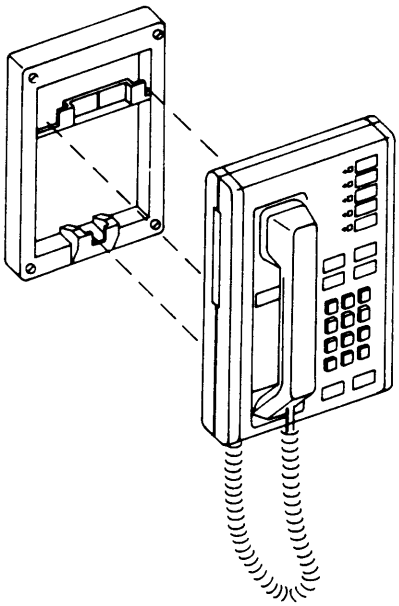

Figure 10

Instructions For

14A 5-Button Voice Terminal Fixed Desk Stand and Wall Mount (32000)

CIB 2885

ISSUE 2

Equipment manufactured by AT&T Technologies in the U.S.A.

Copyright © 1984 AT&T Technologies
All rights reserved

(11C) 34-BUTTON VOICE TERMINAL ADJUSTABLE DESK STAND (32003)

This desk stand is an adjustable mounting base for the 7205, 7305, and 7405 Voice Terminals and provides three angular positions: 8-degree (low), 18-degree (middle), and 28-degree (high).

INSTALLATION INSTRUCTIONS

Note: To avoid pinching your fingers, make certain the adjustable portion of the desk stand is in the lowest position before attempting to install the voice terminal.

1. Set the handset to one side and turn the voice terminal over.

2. Position the stand on the back (or bottom) of the voice terminal so that the voice terminal mounting tabs fit into the “A” mounting slots on the stand (see Figure 1).

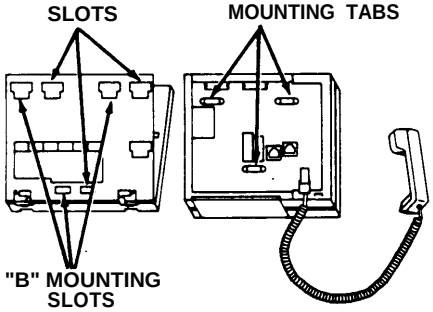

34-BUTTON VOICE TERMINAL (BACK VIEW)

Figure 1

3. Gently slide the stand upward so that the voice terminal tabs fit firmly into the smaller part of the three mounting slots (see Figure 2).

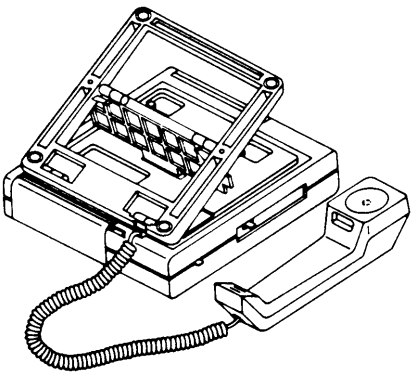

Figure 2

4. The angle of the stand can be adjusted (see Figure 3) by performing the following:

   - Use the forefinger of your left hand to hold the back of the stand firmly to the desk top.

     To RAISE — Using the right hand, slowly lift the rear of the voice terminal until a desired position is reached.

     To LOWER — Using the right hand, lift the rear of the voice terminal to release the locking tension. With the thumb of your left hand, carefully depress the side lever and allow the stand to lower to a desired position.

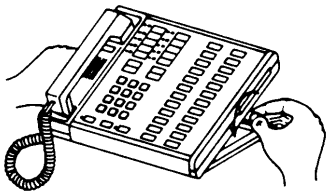

Figure 3

REMOVAL INSTRUCTIONS

To remove the stand from the 34-Button Voice Terminal, slide the stand out of the mounting tabs by pushing the voice terminal upward.

(203A) 34-BUTTON VOICE TERMINAL WALL MOUNT (32006)

This bracket is used to mount 7205, 7305, and 7405 Voice Terminals on a wall surface.

INSTALLATION INSTRUCTIONS

Note: Be sure to select a location for installation at least as large as the voice terminal; the wall mounting is slightly smaller than the terminal itself.

1. Select the wall mounting location; using the wall mount as a template, mark the four mounting hole locations (two upper slots and two lower holes (see Figure 1).

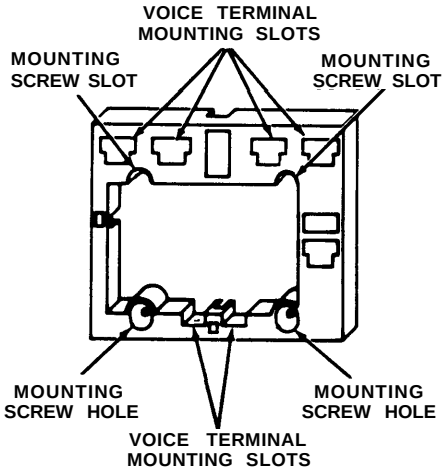

Figure 1

2. Select proper toggler for wall thickness or wall type:
   - For walls 3/8- to 1/2-inch thick, select the smaller of the two sizes provided.
   - For walls 5/8- to 3/4-inch thick, select the larger of the two sizes provided.
   - For solid walls, either of the two sizes may be used.
3. Drill four holes at the four toggler mounting locations, using a 5/16-inch diameter drill.
4. Fold toggler (see Figure 2A).
5. Insert a toggler in each of the mounting locations, and tap each toggler flush to wall (see Figure 2B).
6. Pop the anchor open with the red key — do not hammer the key (see Figure 2C).
7. Insert and partly thread the top two screws into the starter holes of the togglers (see Figure 2D).
8. Position the two upper mounting slots onto the screws and slightly tighten (see Figure 2E).
9. Insert the two remaining screws into the lower mounting holes (see Figure 2E).
10. Tighten all four screws securely.

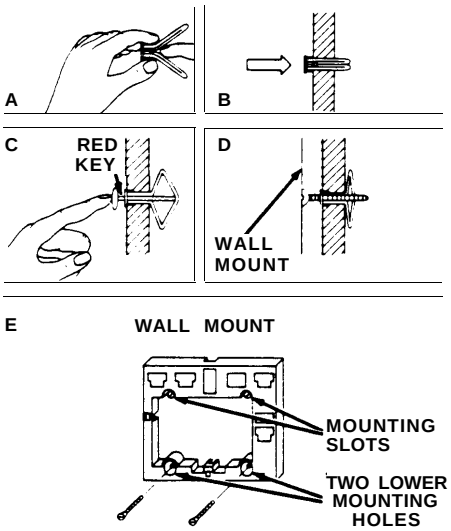

Figure 2

11. Convert the 34-Button Voice Terminal from a desk terminal to a wall-mounted terminal by following the substeps below:
    - Remove the desk stand.
    - Remove the number card retainer and the number card (see Figures 3 and 4).
    - Remove the screw under the number card and lift out the handset retainer from the upper housing (see Figure 5).
    - Rotate the handset retainer 180 degrees end-over-end (see Figure 6).
    - Replace the handset retainer into upper housing. If properly inserted, a portion of the handset retainer should be projecting into the handset well of the upper housing (see Figure 7).
    - Replace screw.
    - Replace number card and number card retainer.

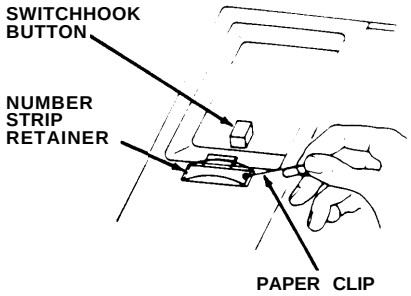

Figure 3

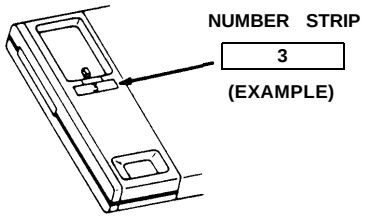

Figure 4

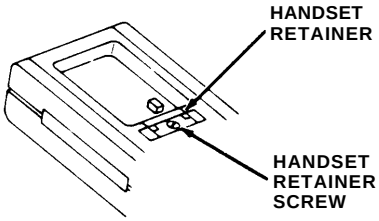

Figure 5

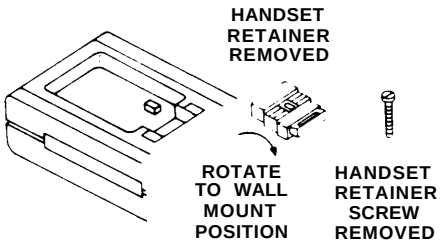

Figure 6

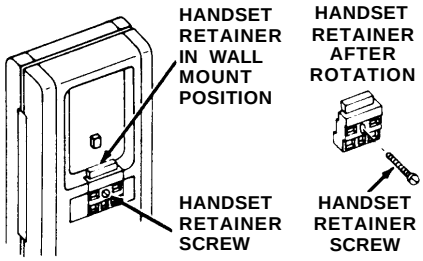

Figure 7

12. Thread one end of the D8W Modular Cord up through the cord slot in the wall mount, and plug the cord into the jack labeled “LINE” on the back of the voice terminal (see Figure 8).

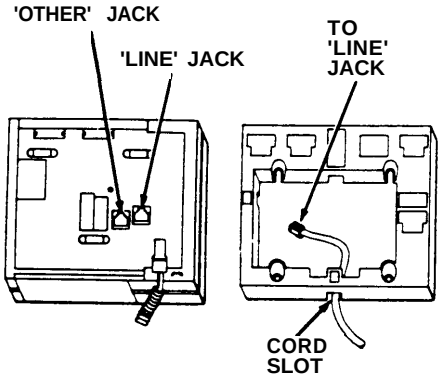

Figure 8

13. Position the back (or bottom) of the voice terminal so the three terminal mounting tabs (Figure 9) fit into the terminal mounting slots.

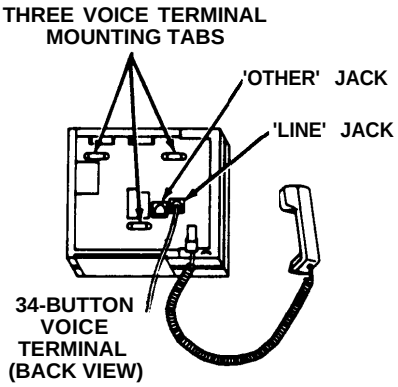

Figure 9

14. Gently slide the voice terminal downward so the three tabs fit into the smaller part of the corresponding mounting slots (see Figure 10).

15. Plug the loose end of the handset cord into the handset.

16. The installation is complete.

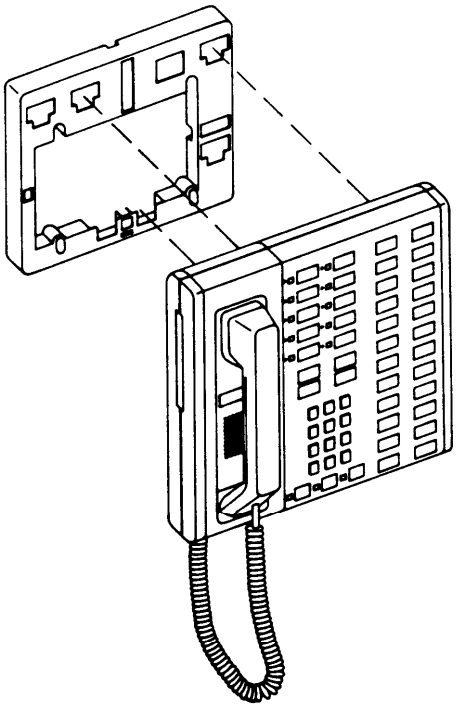

Figure 10

Instructions For

203A 34-Button Voice Terminal Wall Mount (32006)

CIB 2887

ISSUE 2

Equipment manufactured by AT&T Technologies in the U.S.A.

Copyright © 1984 AT&T Technologies
All rights reserved

(267A2) LINE BRIDGING ADAPTER (61401)

This adapter kit contains a 267A2 Adapter. The adapter connects to a single modular jack network interface to provide two-jack access to the same line. This allows auxiliary devices such as telephone answering machines to be connected to the line.

INSTALLATION INSTRUCTIONS

The adapter may be used in any of the following configurations:

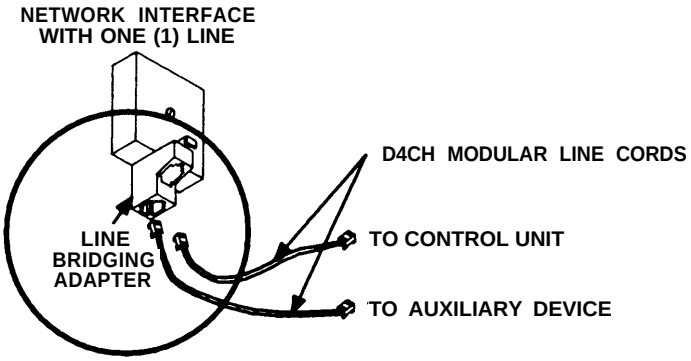

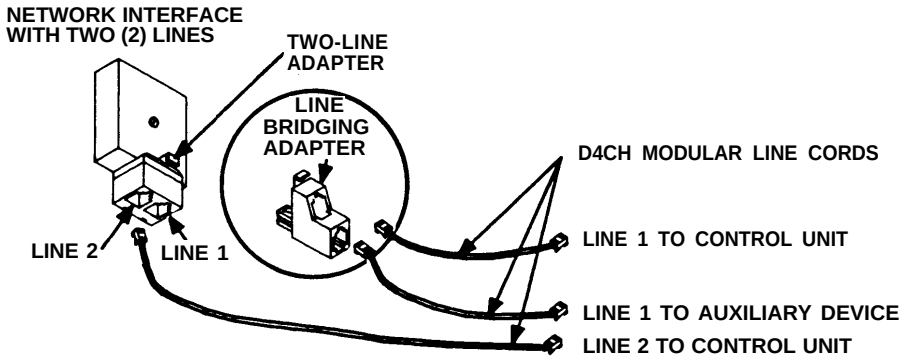

1. Position the adapter so that its plug matches the jack of the network interface connecting block. Insert the adapter plug firmly. It should lock with a slight “click”.

2. The two jacks of the adapter now provide convenient connecting points for modular line cords.

(452A-50) EXTRA-ALERT CONTROL SWITCH (32630)

This switch provides ON/OFF control, and is required for the proper installation of certain older extra-alert devices.

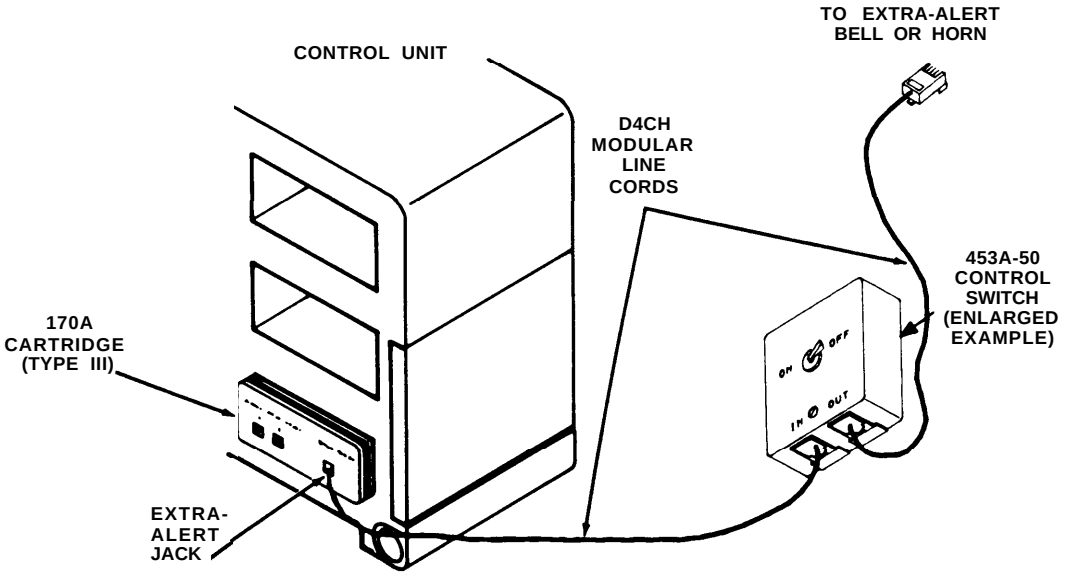

INSTALLATION

1. Insert one end of a D4CH Modular Line Cord into the OUT jack of the 452A-50 Switch and the opposite plug end into an extra-alert device or other appropriate apparatus (e.g., relay box, bell, horn, etc.).

2. Remove the plastic hole plug from the “Extra-Alert” jack on the 170A or (Type III) Cartridge and plug one of the modular cords (D4CH) into the “Extra-Alert” jack.

3. Insert one plug end of a second D4CH Modular Line Cord into the IN jack of the 452A-50 Switch and the opposite plug end into the “Extra-Alert” jack of the 170A or Cartridge (Type III).

4. Attach the 452A-50 Switch to the wall.

5. Place the switch in the ON position. (Your extra-alert device will now sound each time you receive a call from outside your system.)

(349A) ACOUSTIC COUPLER ADAPTER

This adapter provides a means of mechanically connecting the voice terminal handset to the handset interface of existing acoustic modems.

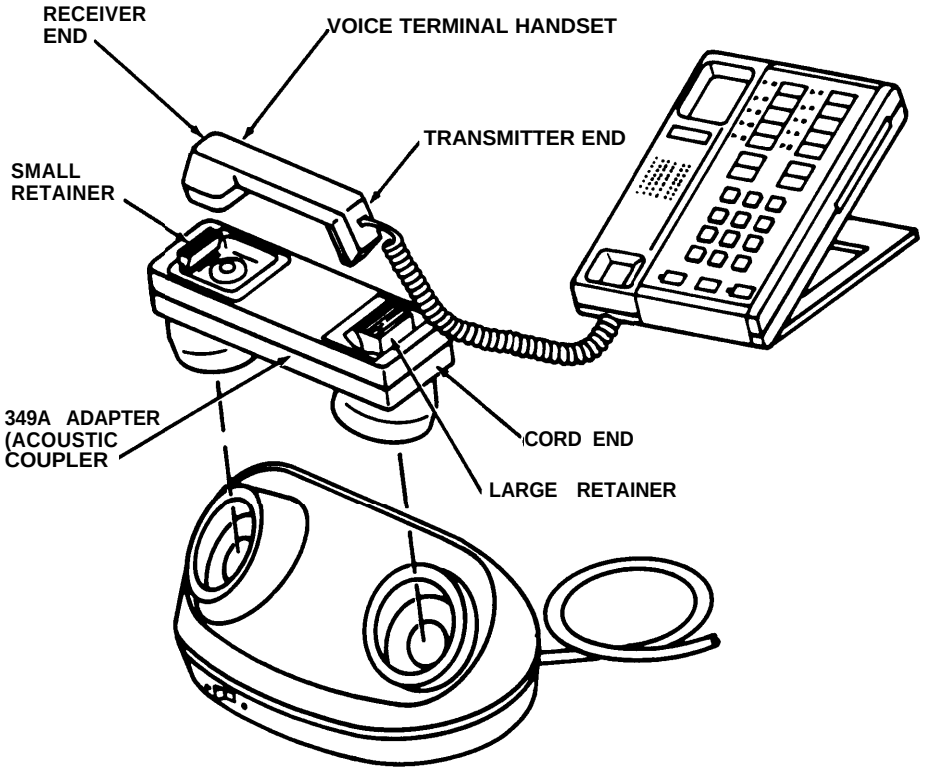

INSTALLATION INSTRUCTIONS

1. Align the 349A Adapter's transmitter (large retainer) and receiver (small retainer) ends in the appropriate cups of the modem and lower the adapter until fully seated.

2. Place the handset over the adapter as shown in the illustration.

3. Bend the large retainer out of the way and insert the handset transmitter into the adapter cup until it is fully seated.

4. Move the adapter's small retainer out of the way and press the handset receiver downward into the cup until it is fully seated.

(346A) ACOUSTIC COUPLER ADAPTER (31710)

This adapter provides a means of mechanically connecting the voice terminal handset to the handset interface of existing acoustic modems.

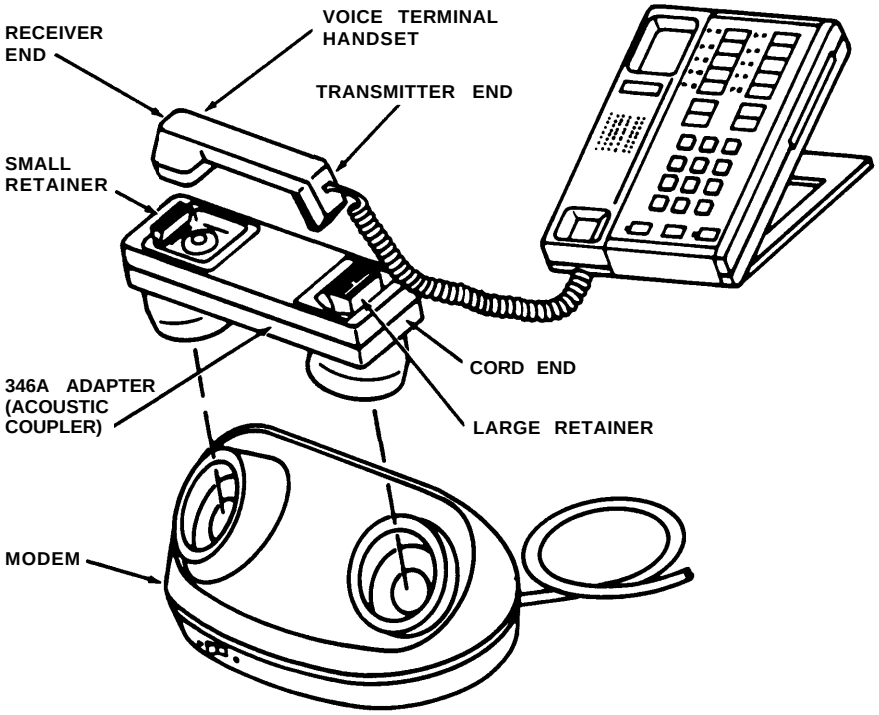

INSTALLATION INSTRUCTIONS

1. Align the 346A Adapter's transmitter (large retainer) and receiver (small retainer) ends in the appropriate cups of the modem and lower the adapter until fully seated.

2. Place the handset over the adapter as shown in the illustration.

3. Bend the large retainer out of the way and insert the handset transmitter into the adapter cup until it is fully seated.

4. Move the adapter's small retainer out of the way and press the handset receiver downward into the cup until it is fully seated.

(D181233) LINE-POWERED ALERT RINGER AND PARTS (61211)

The D181233 Line-Powered Alert Ringer and Parts (see Figure 1) consists of an E1CM Ringer with a 290A Adapter, a 1049A Mounting Plate, and a 25-foot Modular Line Cord (D4CH).

Note: If you have two lines entering at the network interface (off one jack), you will need a Two-Line Adapter (267C) to separate the lines.

This audible ringer can be used as an auxiliary ringer near the network interface or can be installed to provide audible ringing at a remote location. A volume control lever permits continuous adjustment of ringing volume from OFF to LOUD.

Note: Before installation, inform your Local Telephone Exchange Service Company of your Ringer Equivalence Number (1.0-A) for the ringer.

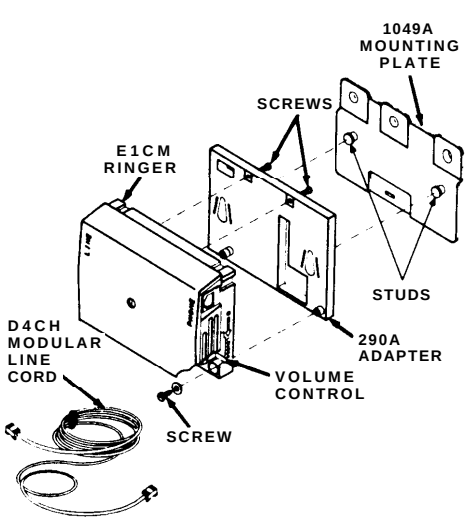

Figure 1—D181233 Line-Powered Alert Ringer and Parts (61211)

INSTALLATION

The ringer assembly can be installed on the line going from the network interface to the control unit (see Figure 2) or bridged directly onto the line to provide ringing at a remote location (see Figure 3). For installation at a remote location, a Line Bridging Adapter Kit (267A2 Adapter and D4CE-50 Line Extension Cord) is required.

IN-LINE INSTALLATION (Figure 2)

Note: This installation should be used when the ringer is to be placed between the network interface and the control unit.

1. Secure the 1049A Mounting Plate to the mounting surface using the appropriate fasteners (screws or togglers).

2. Remove the rubber grommets from the base of the ringer and secure the 290A Adapter to the ringer using the screws provided with the adapter.

   Note: Two screws are placed through the top of the adapter and into the ringer. One screw is placed through the ringer and into the adapter.

3. Align the slotted holes in the 290A Adapter with the studs on the mounting plate and push in and down to secure the ringer assembly in place.

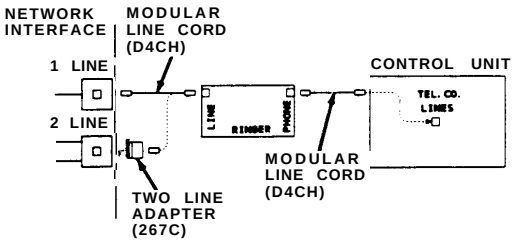

Figure 2—In-Line Installation

Connections

4. At the network interface, connect the ringer by Methods A or B (described below) as applicable:

   Method A. At the network interface jack with single line appearance, plug one end of a Modular Line Cord (D4CH) into the network interface jack. Plug the other end into the LINE jack on the ringer.

   Method B. At the network interface jack with two-line appearances, plug a Two-Line Adapter (267C) into the line jack. Then plug one end of a Modular Line Cord (D4CH) into the line jack on the two-line adapter that is to have auxiliary ringing. Plug the other end of the modular line cord into the LINE jack on the ringer.

5. Plug one end of another Modular Line Cord (D4CH) into the PHONE jack on the ringer. Plug the other end of the cord into the appropriate Tel. Co. Lines jack on the control unit.

Test and Adjust Ringing

6. Place a call to the line number with the ringer installed. When ringing occurs, adjust the volume control lever for the desired loudness.

REMOTE INSTALLATION (Figure 3)

Note: This installation is used when you want to place the ringer in a remote location (25 feet or even further if you purchase a D4CE-50 Line Extension Cord), and the ringer has to be bridged (via 267A2 Adapter) onto the line going from the network interface to the control unit.

1. Secure the 1049A Mounting Plate to the mounting surface using the appropriate fasteners (screws or togglers).

2. Remove the rubber grommets from the base of the ringer and secure the 290A Adapter to the ringer using the screws provided with the adapter.

   Note: Two screws are placed through the top of the adapter and into the ringer. One screw is placed through the ringer and into the adapter.

3. Align the slotted holes in the 290A Adapter with the studs on the mounting plate and push in and down to secure the ringer assembly in place.

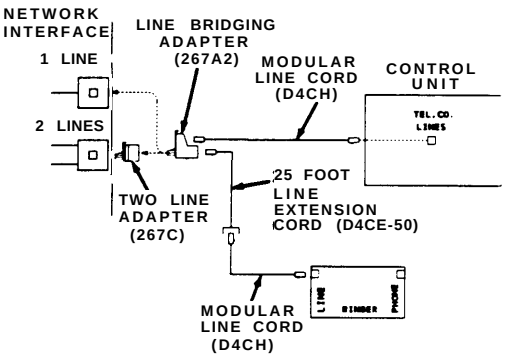

Figure 3—Remote Ringing Installation

Connections

4. At the network interface, connect the ringer by Methods A or B (described below) as applicable.

   Method A. At the network interface jack with single-line appearance, plug a Line Bridging Adapter (267A2) into the network interface jack.

Method B. At the network interface jack with two-line appearances, plug a Two-Line Adapter (267C) into the line jack. Plug the Line Bridging adapter (267A2) into the line jack of the two-line adapter that is to have remote ringing.

5. Insert the plug end of a Line Extension Cord (D4CE-50) into one jack on the line bridging adapter.

6. Plug one end of a Modular Line Cord (D4CH) into the jack end of the Line Extension Cord (D4CE-50) and plug the other end of the cord into the LINE jack on the ringer.

7. Plug one end of another Modular Line Cord (D4CH) into the unoccupied jack on the line bridging adapter and plug the other end into the appropriate Tel. Co. Lines jack on the control unit.

Test and Adjust Ringing

8. Place a call to the line number with the ringer installed. When ringing occurs, adjust the volume control lever for the desired loudness.

Instructions For

D181233 Line-Powered Extra-Alert E1CM Ringer and Parts (61211)

CIB 2924
ISSUE 1

Copyright © 1984 AT&T Technologies
All rights reserved

Equipment manufactured by AT&T Technologies in the U.S.A.

(7305 H02) 34-BUTTON DELUXE VOICE TERMINAL (3166)

The 34-Button Deluxe Voice Terminal (Figure 1) provides access to intercom and outside lines, and to programmable and other button features which may be provided in your communications system.

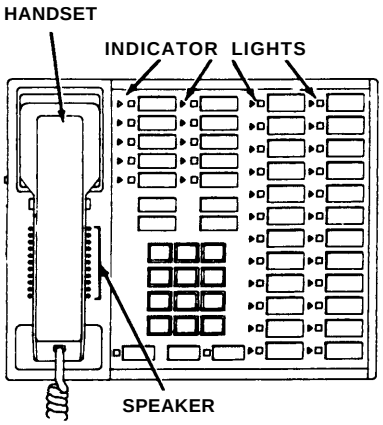

Figure 1

ASSEMBLING YOUR VOICE TERMINAL

1. Unpack voice terminal and coiled handset cord.
2. Turn voice terminal upside down and plug one end of handset cord into jack with the drawing of the handset beside it (see Figure 2).

   Warning: ***Do not plug the handset cord into the jacks labeled "LINE" or "OTHER".***

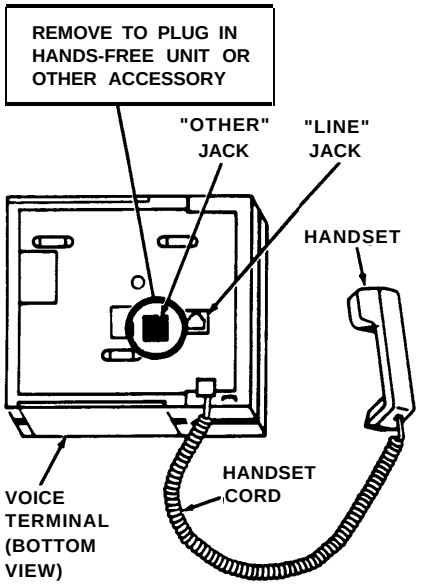

Figure 2

3. Turn the voice terminal right side up.
4. Plug the loose end of the handset cord into the handset (see Figure 2).
5. Position the voice terminal on the desk stand or wall mount.
6. To convert the voice terminal from a desk terminal to a wall-mounted terminal, follow the instructions packed with the wall mount (CIB 2887).

SPEAKER/RINGING AND TEST CONTROL

Test/Program (T/P) Control

The T/P switch is located on the left side of the voice terminal (see Figure 3). It has three positions: T (spring loaded and must be held in the T position), center (indicated by a "dot"), and the P position. It is set to the center position for normal operation of the voice terminal. After connection to the control unit, the voice terminal can be put into the test mode by holding the switch in the T position to test the lights and ringer (all red and green lights will flash and the set will ring if it is working properly). The voice terminal can be put into the program mode by placing the switch in the P position.

Speaker/Ring Volume Control

The volume control is located on the left side of the voice terminal (see Figure 3). Sliding the switch away from you increases the volume while sliding it toward you decreases the volume.

Note: The volume control changes the volume of alerting rings, speaker, and button clicks.

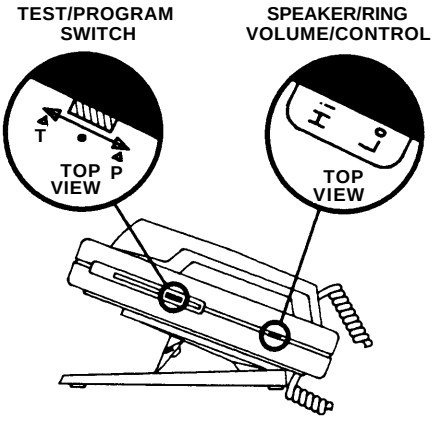

Figure 3

REMOVING AND REPLACING LABELS

Removal

1. Above the touch-sensitive buttons, grasp the silver tab and pull the label out of the label slot (see Figure 4).
2. Labels may now be typed or handwritten in pencil or ink and can be erased (if necessary).

Replacing

1. Insert the bottom of the label into the label slot above each column of the touch-sensitive buttons.
2. Slide the label all the way into the slot until the desired typed label appears next to the proper button. (Note that the label slides into the slot and behind a thin top graphics overlay.)

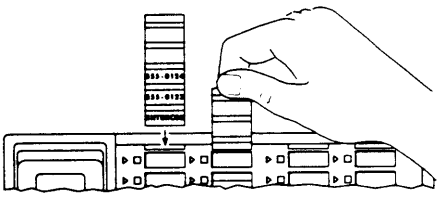

Figure 4

Equipment manufactured by AT&T Technologies in the U.S.A.

(Z200A) 2–LINE/5–VOICE TERMINAL MODULE FOR MODEL 820 (61219)

This module (Figure 1) is used to expand the capacity of your Model 820 control unit. Addition of this module wiIl enable you to have two more outside lines and five voice terminals. Each module comes packed with two line cords (7-foot) and a 267C (two-line) adapter.

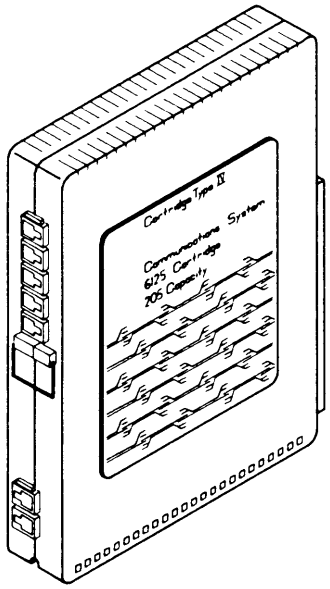

Figure 1

1. Open and remove the control unit door (see Figure 2).

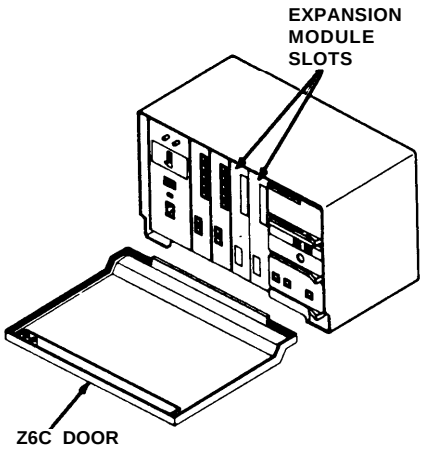

Figure 2

Warning: ***Switch off the control unit power. If you have an auxiliary power supply, unplug the auxiliary power cord from the control unit (Figure 3) before inserting this module.***

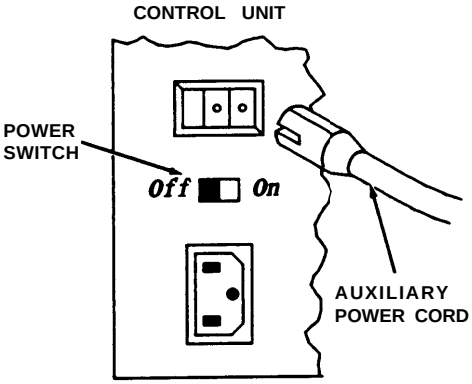

Figure 3

2. Locate the leftmost available expansion module slot.

3. Grasp the handle on the faceplate of the expansion module slot and pull it open (see Figure 4). Do not remove the faceplate.

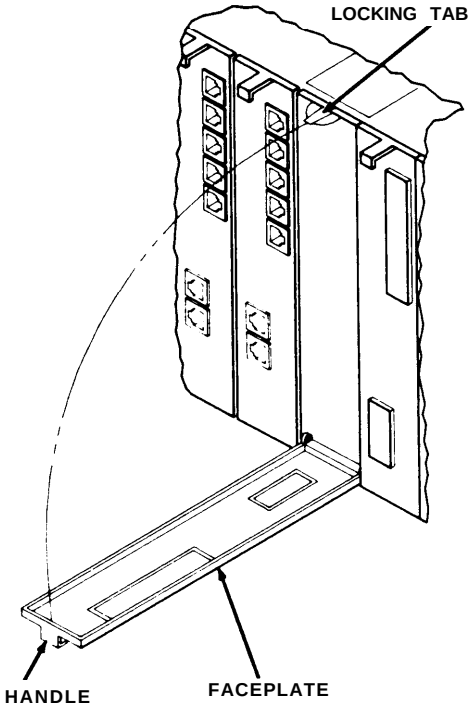

Figure 4

4. Slide the module slowly and steadily into the slot (Figure 5) until it is properly seated.

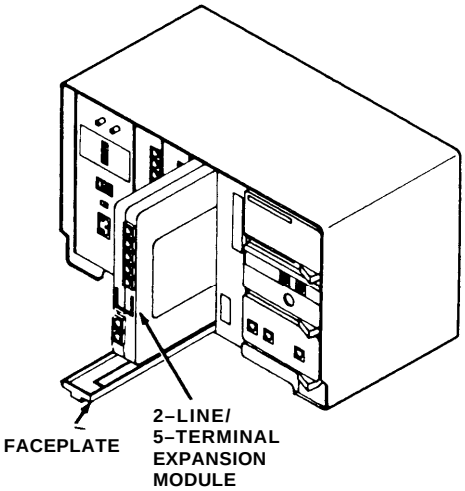

Figure 5

5. Close the faceplate.

6. Install the line cords (7-foot) and terminal cords (2-1/2 foot). Arrange the cords underneath the control unit.

7. Repeat Steps 2 through 6 if installing a second expansion module.

8. Reconnect the auxiliary power cord back to the control unit and switch the control unit power back on.

   Note: When you apply ac power, the red warning light on the control unit should come on momentarily and then go off. The green light should come on and stay on.

9. Reinstall the control unit door.

Equipment manufactured by AT&T Technologies in the U.S.A.

TEMPLATE

WALL MOUNTING KIT

INSTALLATION INSTRUCTIONS

1. Choose a location for your control unit according to the instructions in your installation manual.
2. Hold the template up to the location; make sure it is level; then mark where the two mounting holes should go. (pierce the center of the holes with a small nail or equivalent).
3. If you are mounting the bracket on:
   - PLYWOOD or SHEET METAL, drill two 9/64-inch holes.
   - PLASTERBOARD or WOODPANELING, drill two 3/16-inch holes (it is recommended that you use expansion bolts to secure the bracket).
4. Fasten the bracket to the wall.

SYSTEM DIRECTORY — MODEL 820

		INTERCOM NUMBER	PERSON OR LOCATION	WIRING RUN	RESTRICTED	INTERCOM NUMBER
Your service is [ ] Basic [ ] Feature Package M [ ] Feature Package J		9/10		W	Y/N	20
OUTSIDE LINE NUMBERS:		11		W	Y/N	21
		12		W	Y/N	22
Line M	[ ] ADMIN [ ] NORM	13		W	Y/N	23
Line G		14		W	Y/N	24
Line F	[ ] TOLL PREFIX [ ] AREA CODE	15		W	Y/N	25
Line E		16		W	Y/N	26
Line D	[ ] TONE [ ] PULSE	17		W	Y/N	27
Line C		18		W	Y/N	28
Line B		19		W	Y/N	29
Line A						

- System Directory — adhesive-backed label to be filled out with essential system and user information and attached to the control unit door.

Wall Mounting Your Control Unit

1. Choose a location for your control unit according to the instructions in your “Installation Manual.” Make sure your mounting location is as large as the TEMPLATE (attached).

2. Hold the template up to the location; make sure it is level; then mark where the two mounting holes should go. If you are replacing a small wall-mounted unit from previous telephone service, you may be able to use the old mounting holes.

3. If you are mounting the bracket on:

   - PLYWOOD or SHEET METAL, drill two 9/64-inch holes.

   - PLASTERBOARD or WOOD PANELING, drill two 3/16-inch holes (expansion bolts recommended for mounting bracket).

4. Position the bracket over the holes and insert the self-tapping screws.

5. Tighten the screws to securely attach the mounting bracket to the surface.

6. Position the control unit against the mounting bracket so the mounting tabs fit into the keyhole slots in the back of the control unit.

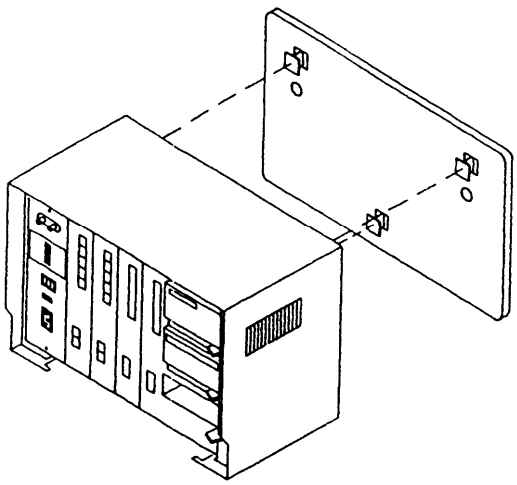

7. Gently slide the control unit straight down so the mounting tabs fit into the small top part of the keyhole slots.

PRINTED IN U.S.A.

CIB 3004

Instructions For
(Z110A) MODEL 820 CONTROL UNIT INSTALLATION KIT (6120)

CIB 3004
Issue 1

Copyright © 1984 AT&T Technologies
All rights reserved

Equipment manufactured by AT&T Technologies in the U.S.A.

This kit contains items needed to install your Model 820 control unit. Instructions for using the wall mounting kit are included here; instructions for using other items are included in your Installation Manual. You may not use all these items during your initial installation. SAVE unused items in the storage box for later changes or growth in your system. The kit includes.

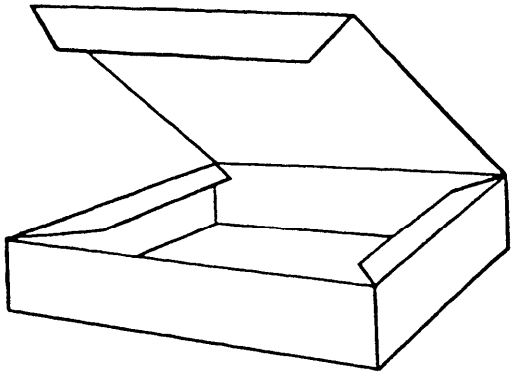

- Storage Box — for storing unused items

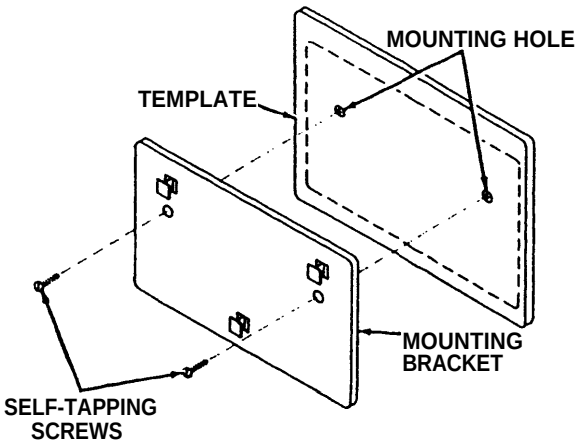

- Wall Mounting Kit — for wall mounting control unit

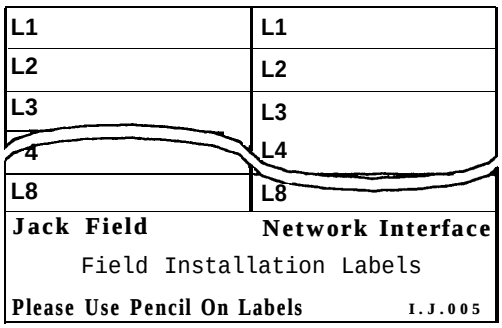

- Telephone Number Label Pairs — used to identify outside line telephone numbers at the network interface or jack field

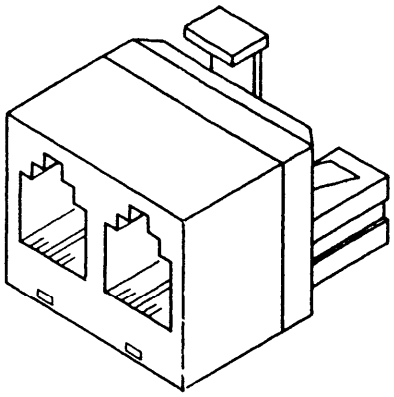

- Two-Line Adapter — used to connect two line cords to a single network interface (RJ14C) where two outside telephone lines enter the premises

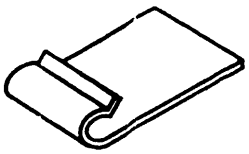

- Cord Clips (Pack of 10) — adhesive-backed clips to fasten cords to the wall

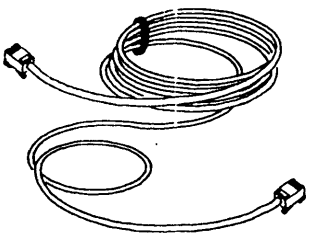

- Line Cords (Two) — used to connect the network interface jacks to the control unit jacks or jack field

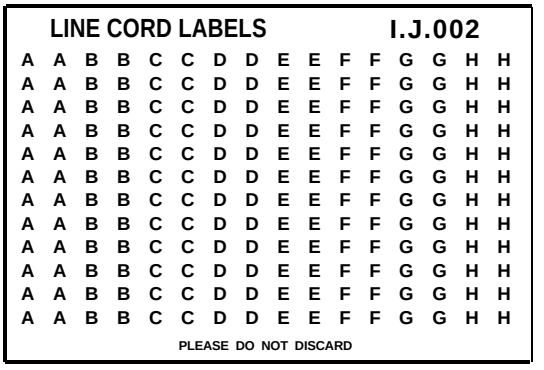

LINE CORD LABELS **I.J.002**

A	A	B	B	C	C	D	D	E	E	F	F	G	G	H	H

CIB 3006

Wiring Installation Instructions

© 1984 AT&T
All Rights Reserved

WIRING INSTALLATION INSTRUCTIONS

These instructions explain how to install building wiring for telephones. The instructions are intended for someone familiar with building construction.

When you finish these procedures, you will have:

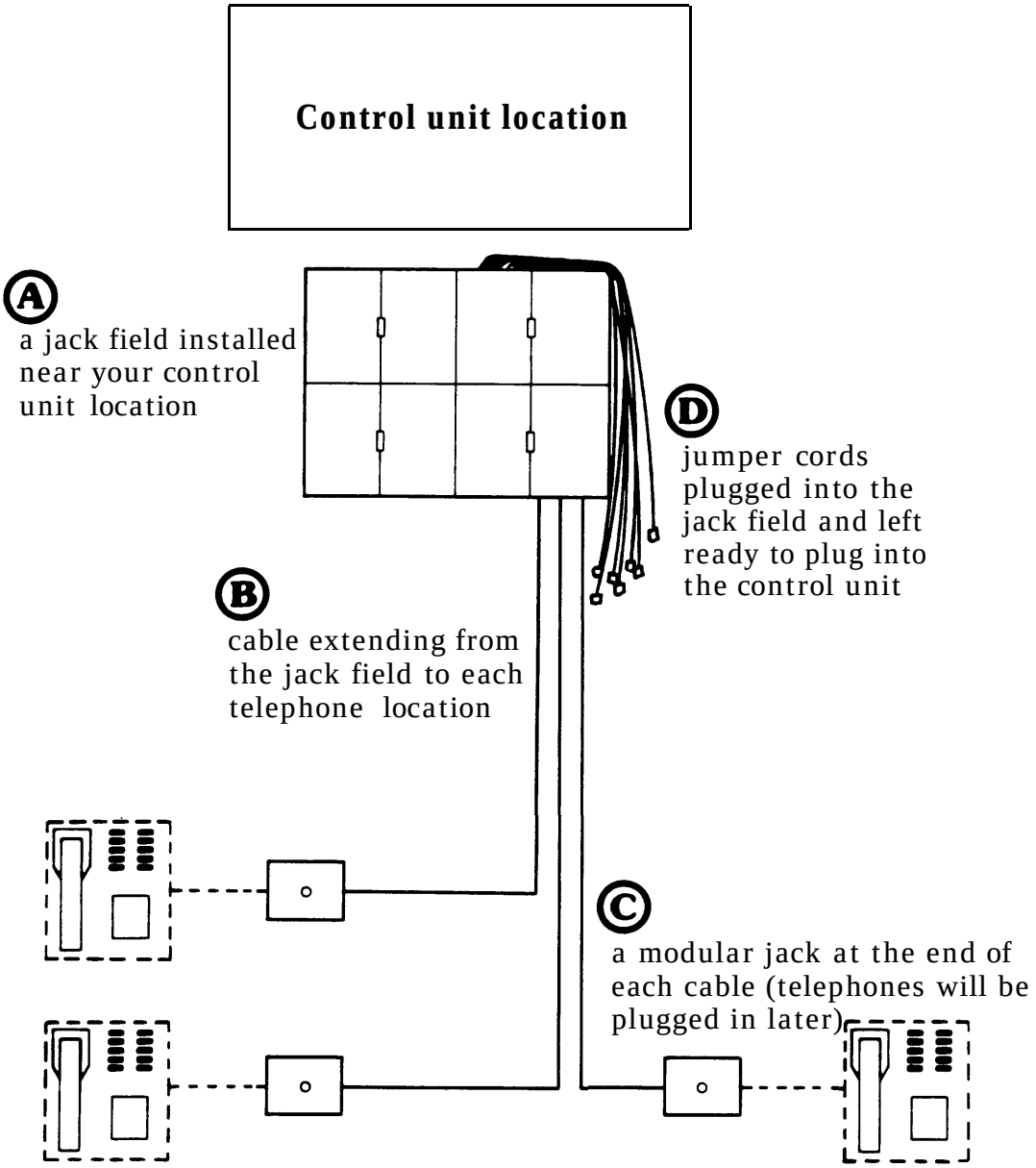

Installing your wiring involves these four steps:

1. Getting started
2. Mounting the jack panels
3. Running cable and installing modular jacks
4. Connecting jumper cords.

WARNING: National and local building codes and fire regulations forbid routing flammable wiring inside or on top of air plenums or ducts or along hot pipes. Consult your local ordinances and regulations for routing flammable wiring through walls or floors. The manufacturers, distributors, and their agents will not be responsible for damage due to improperly installed wiring.

1 You will need these materials:

- a floor plan of your building that shows telephone locations and cable routes between these locations and your communications system control unit
- a screwdriver
- scissors
- drill and bits appropriate for 3/16-inch cable.

Small cable clips are provided, but you may also want bigger clips, cable ties, and a stapler and staples for fastening cables.

2 The other materials you will need come in three orderable kits. Examine their contents using these figures. Make sure you have the right number of kits for your communications system.

WIRING INSTALLATION KIT

(one per communications system)

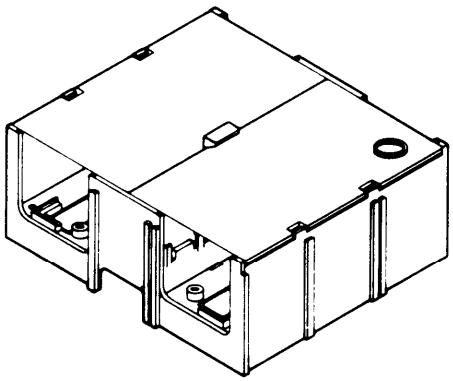

Jack panel box
(Number required depends on number of telephones. You will need one jack panel box per six telephones.)

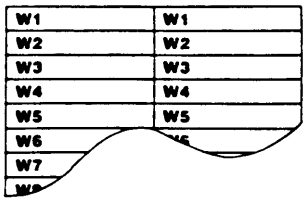

Wiring run labels

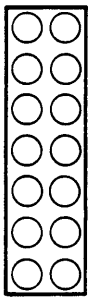

Blue stickers

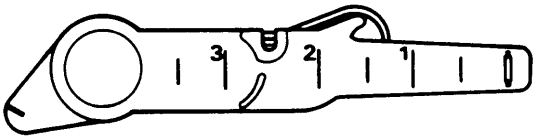

Cable installation tool

TELEPHONE
LOCATION

Telephone location stickers

CABLE EXTENSION KIT

(one per telephone more than 10 feet from the control unit)

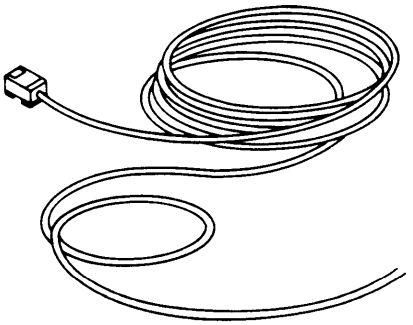

100- or 200-foot length of cable
(Length depends on distance between control unit and telephone.)

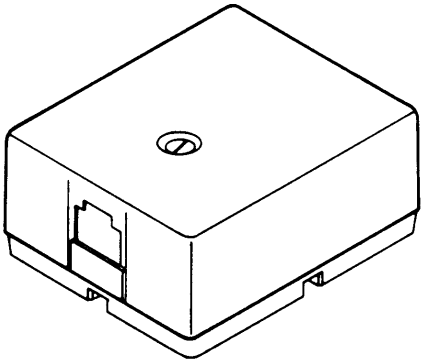

Modular jack

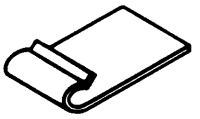

Cable clips

WIRING TERMINATION KIT

(one per telephone)

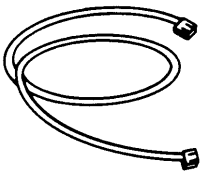

Jumper cord

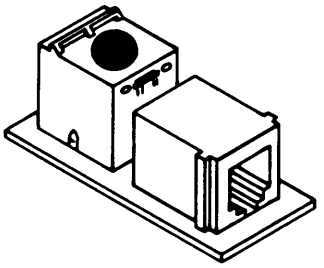

Modjack-to-modjack adapter

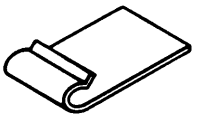

Cable clips

3 Look for the telephone locations on your building floor plan. Affix a telephone location sticker to the wall at each telephone location.

1 On your building floor plan, pencil in the control unit location. The location must comply with the measurements shown in the figure.

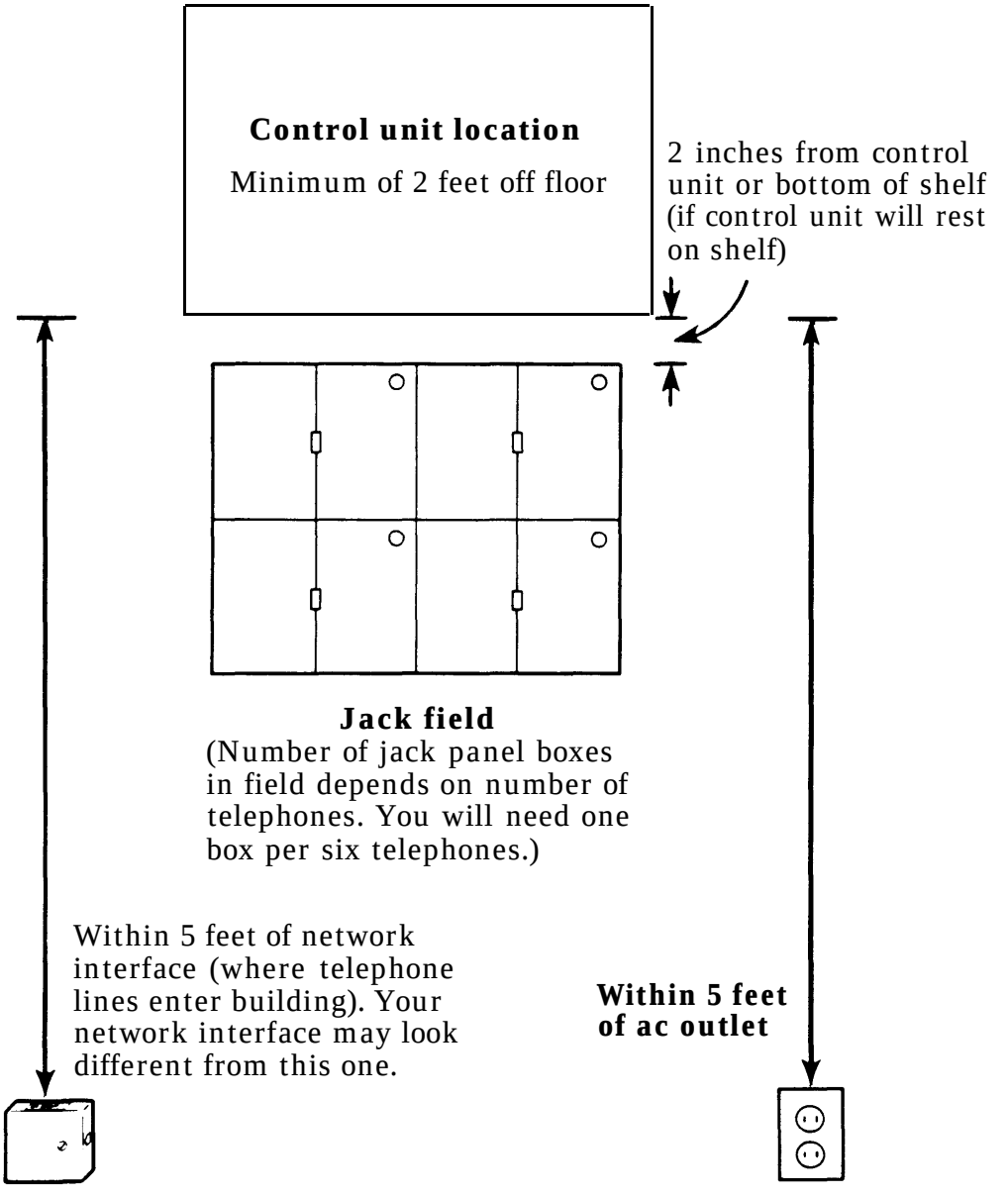

② On the wall, mark where the bottom of the control unit or shelf (if the control unit will rest on a shelf) will be.

③ Screws 1-1/4 inches long come with the jack panel boxes. Choose one of the following methods for mounting the boxes (don't mount the boxes yet):

- For walls with a sturdy supporting structure (studs or cross members): Attach boxes directly with the screws provided.
- For hollow walls: Find a board about 3/8 inch thick and about 2 inches bigger on all sides than the jack field. (Each jack panel box is 5-1/2 inches long and 6-1/2 inches wide.) Mount the jack panel boxes on the board then fasten the board to the wall.

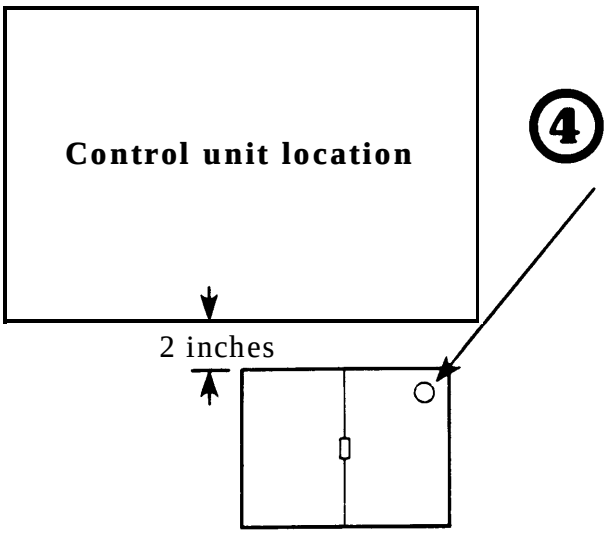

④ Stick a blue dot in the circle on each jack panel box. The blue dot distinguishes boxes for wiring to telephone locations from jack panel boxes for other uses (for example, green dot for line adapters, yellow dot for auxiliary equipment adapters).

⑤ Mark the position of the first jack panel box.

6 Mount the jack panel box with the screws provided or fasteners appropriate for your walls.

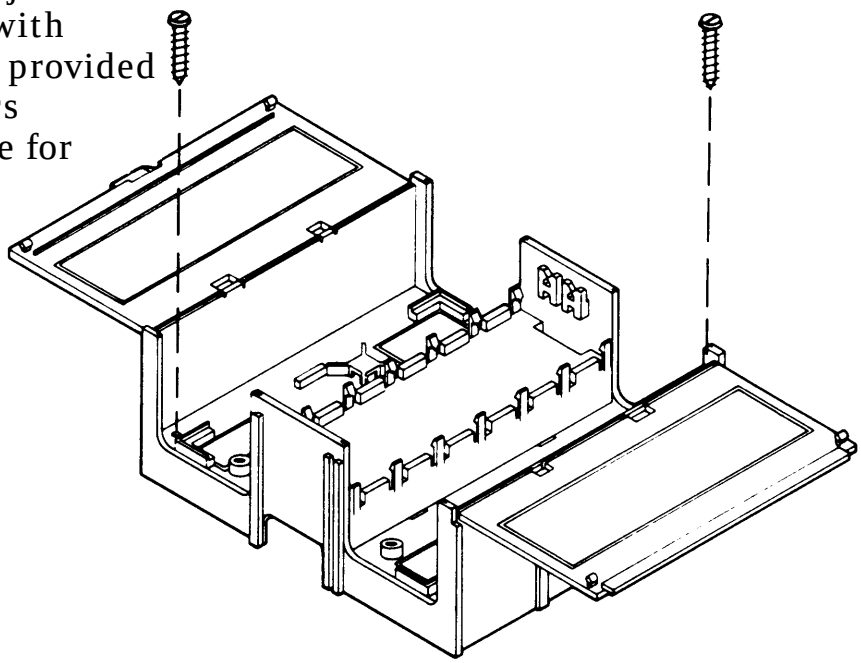

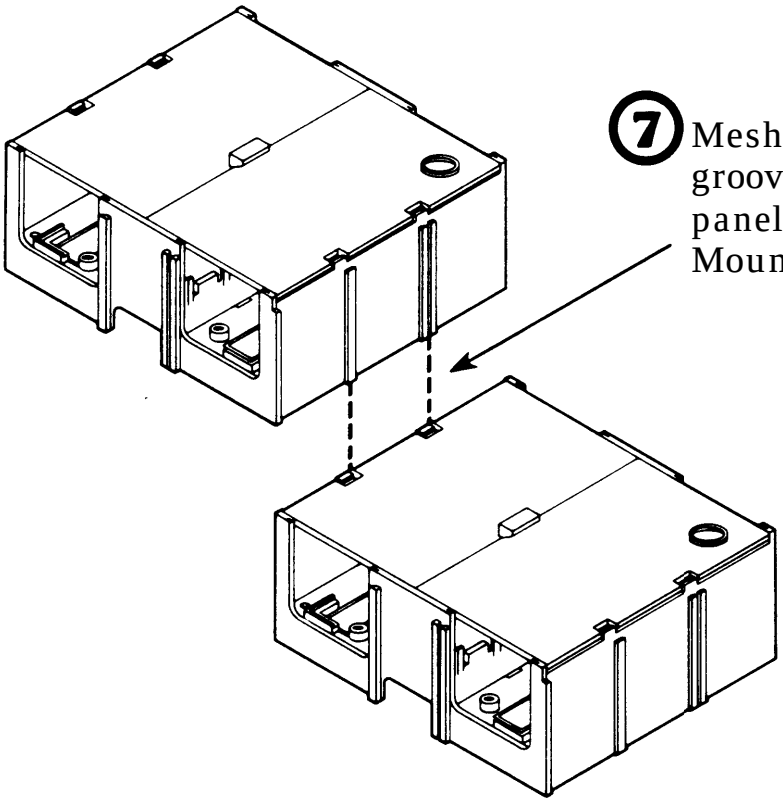

7 Mesh the tongue and groove of another jack panel box with the first. Mount the second box.

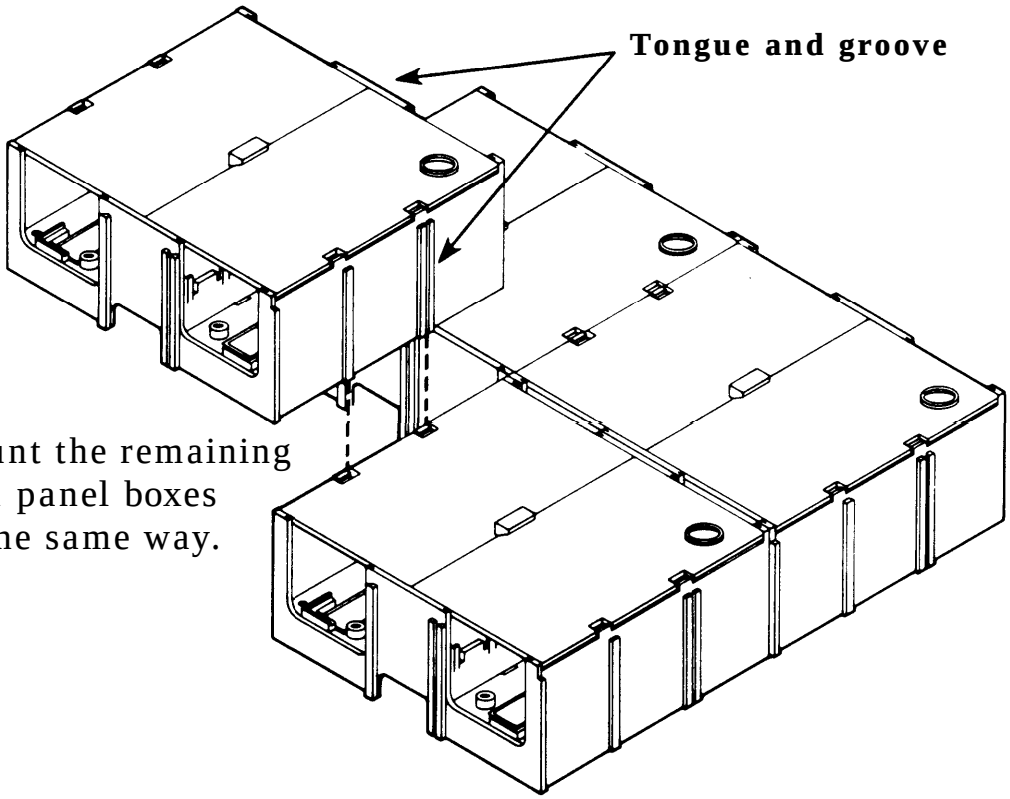

8 Mount the remaining jack panel boxes in the same way.

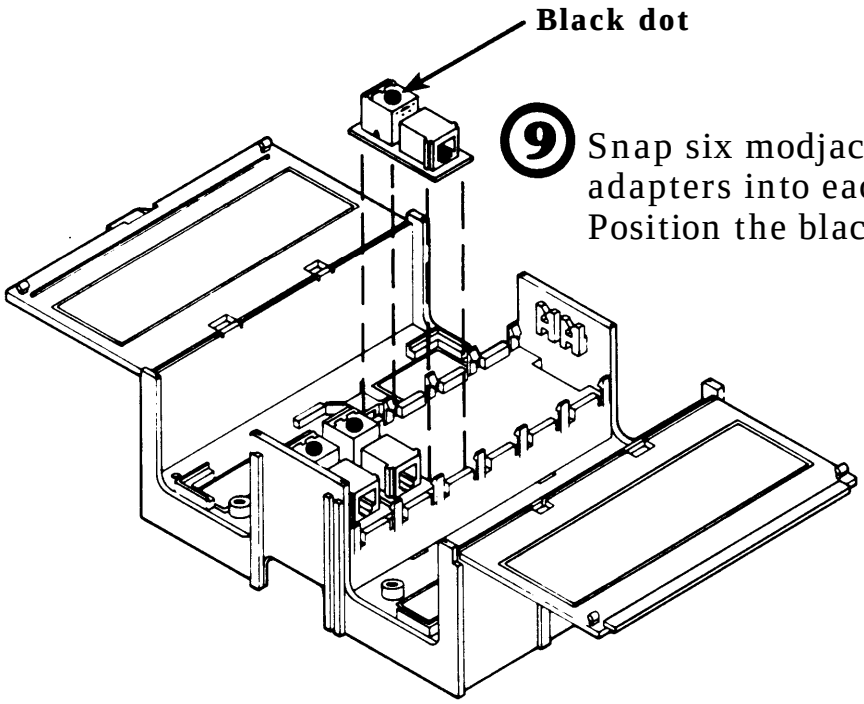

9 Snap six modjack-to-modjack adapters into each jack retainer. Position the black dot on the left.

When completed, a typical cable run will look like this. Special types of cable such as flat under-carpet cable, plenum wiring, flameproof wiring, and 25-pair cable may be available from your dealer.

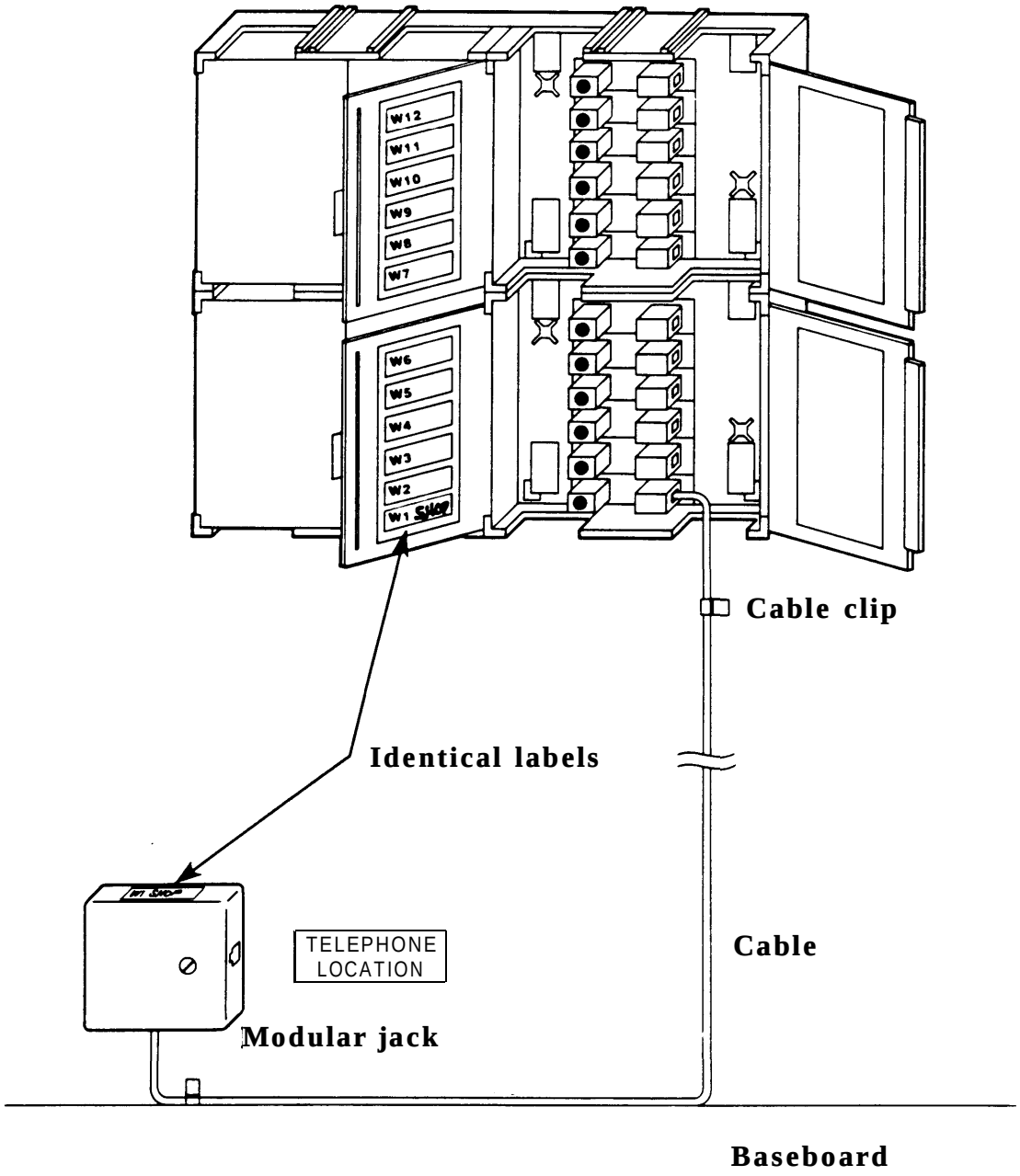

1 Select a Cable Extension Kit with the right length of cable (100 or 200 feet) for one cable run. For runs over 200 feet, you will have to run a 200 foot cable, terminate it in a modular jack, and plug in another cable. The maximum length of any cable run is 1000 feet.

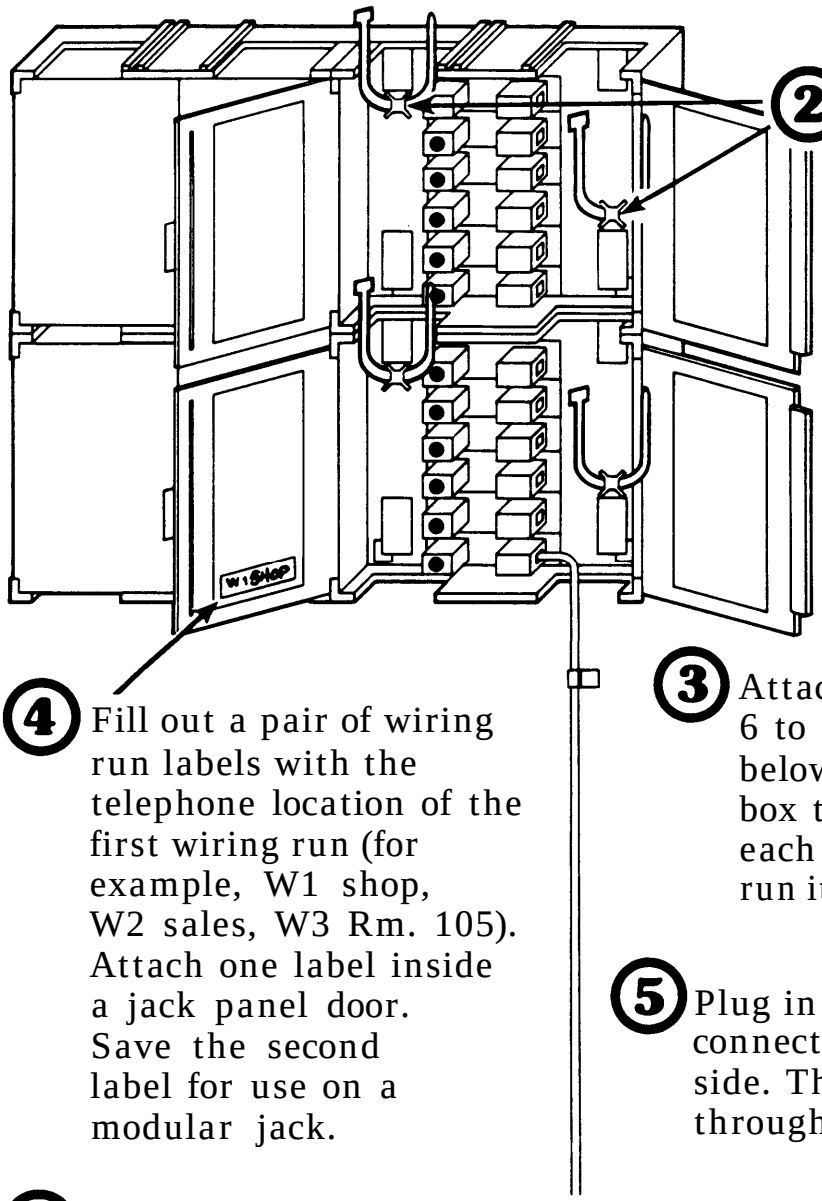

2 If there is no plastic cable loop in place, slide a cable tie under the two "spiders" in each box.

3 Attach a cable clip 6 to 12 inches below the lowest box to support each cable as you run it.

4 Fill out a pair of wiring run labels with the telephone location of the first wiring run (for example, W1 shop, W2 sales, W3 Rm. 105). Attach one label inside a jack panel door. Save the second label for use on a modular jack.

5 Plug in the cable connector on the right side. Thread the cable through the clip.

6 Run the cable out to the telephone location. Avoid sharp kinks or twists. Use cable clips or staples to dress the cable neatly along wall baseboards, molding, etc. Be careful not to damage the cable with staples.

⑦ Find the modular jack from the Cable Extension Kit and the cable installation tool from the Wiring Installation Kit.

⑧ Choose the location for the jack according to the figure. Cut the cable, making sure you allow at least 4 inches extra.

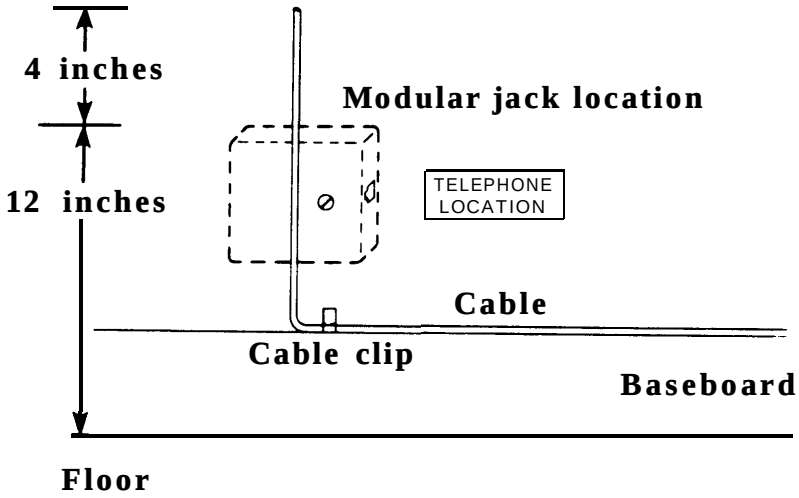

⑨ Fasten the cable to the jack as follows:

Ⓐ Loosen screw. Remove cover and set aside.

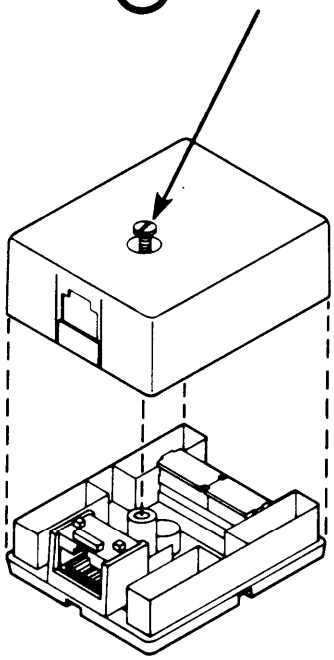

Ⓑ Use cable stripping part of cable installation tool to remove 2 inches of cable cover.

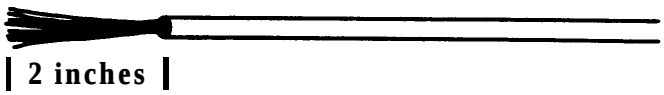

Ⓒ Thread cable through center of jack until 1/4 inch of cable cover shows.

Ⓓ Align cable in one of the notches.

Ⓔ Mount jack with screws or adhesive backing provided.

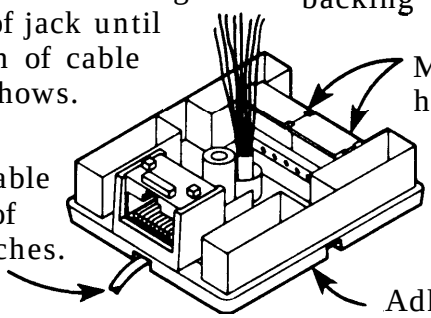

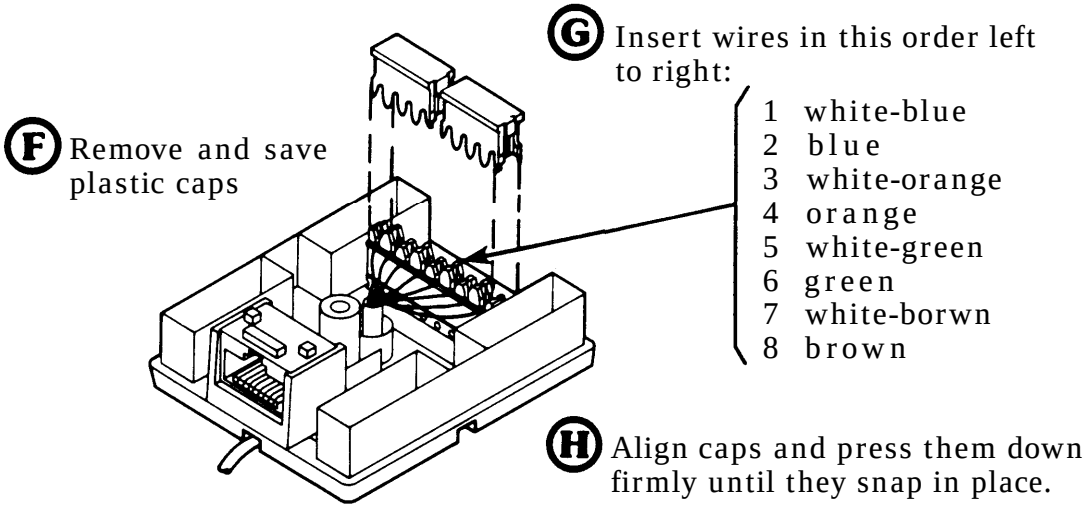
G Insert wires in this order left to right:
1 white-blue
2 blue
3 white-orange
4 orange
5 white-green
6 green
7 white-borwn
8 brown
F Remove and save plastic caps
H Align caps and press them down firmly until they snap in place.

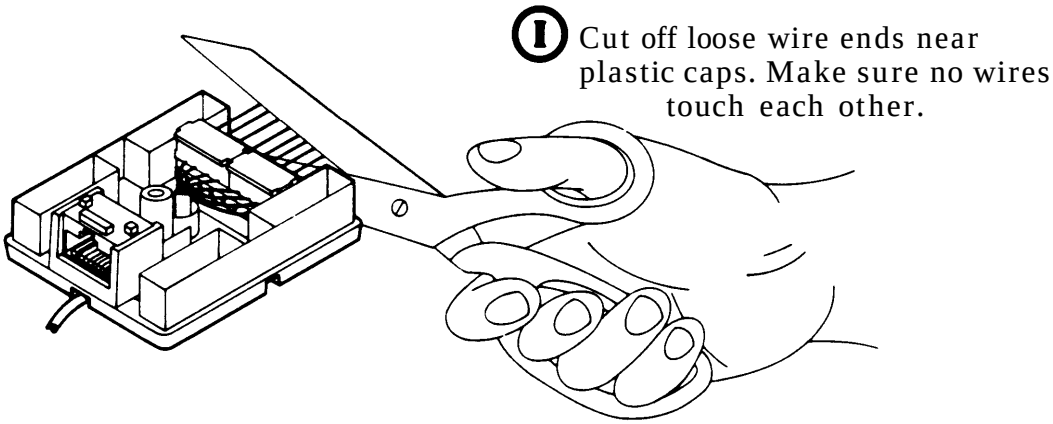
I Cut off loose wire ends near plastic caps. Make sure no wires touch each other.

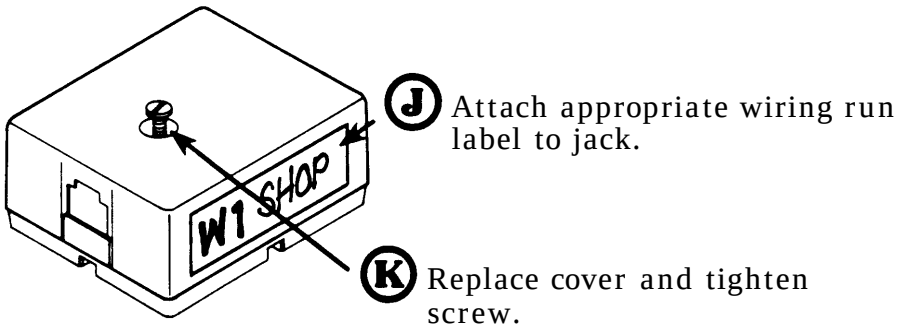
W1 SHOP
J Attach appropriate wiring run label to jack.
K Replace cover and tighten screw.

10 Route your other cables and terminate each one in a modular jack. Be sure to label both ends of each cable run identically.

11 Dress the cables and, if you used cable ties, secure them around the cables.

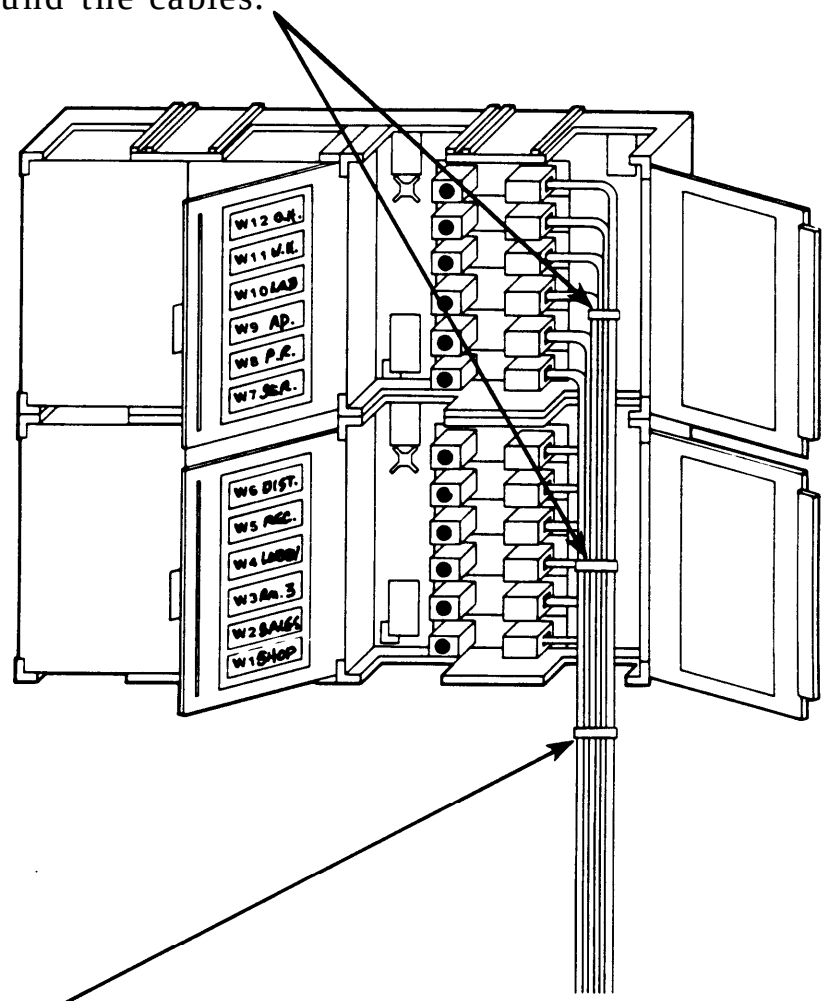

12 Dress the cables neatly through the lower openings and secure them with cable clips or ties.

CONNECTING JUMPER CORDS

2 Plug a jumper cord (from a Wiring Termination Kit) into each left modjack. Drape the cords as shown. They will later be connected to the control unit.

1 Close the right doors of the jack panel boxes.

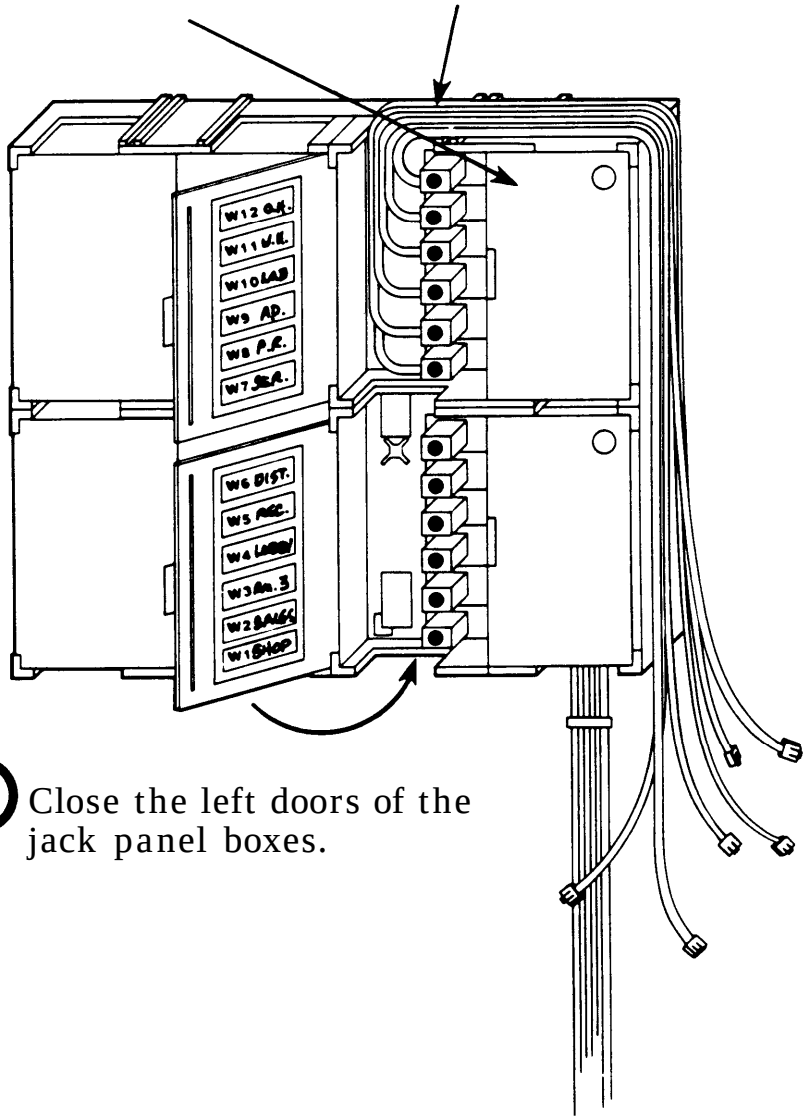

3 Close the left doors of the jack panel boxes.

CONGRATULATIONS! You have now installed the telephone wiring for your communications system.

ADJUNCT POWER SUPPLY FOR 34-BUTTON DELUXE VOICE TERMINAL (D181282) (32811)

The Adjunct Power Supply (Figure 1) for the 34-Button Deluxe Voice Terminal comes packed with a Z400F Adapter and a 7-foot cord (D6AP). The power supply converts 117-volt ac input power to an output of 48-volt dc power.

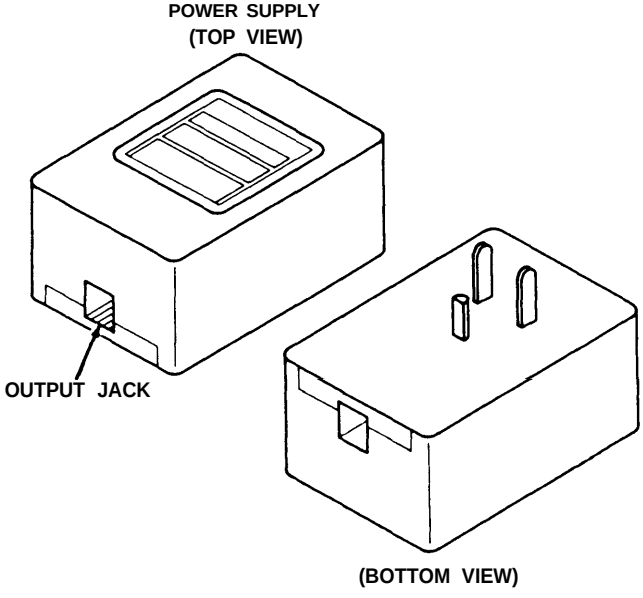

Figure 1

INSTALLATION

1. Disconnect the modular terminal cord (D8W) from the modular terminal jack (103A) or the extension cord leading to the control unit (see Figure 2).

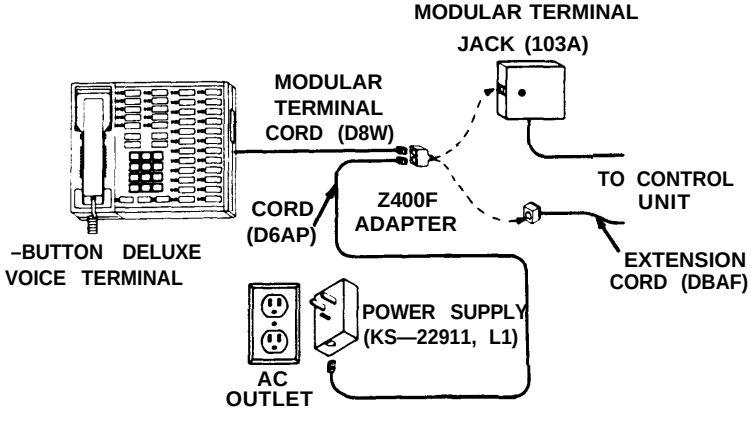

Figure 2

2. Plug the Z400F Adapter into the modular terminal jack or extension cord from which the modular terminal cord was disconnected in Step 1 (see Figure 2).

3. Plug the modular terminal cord into the voice terminal jack on the Z400F Adapter (Figure 3).

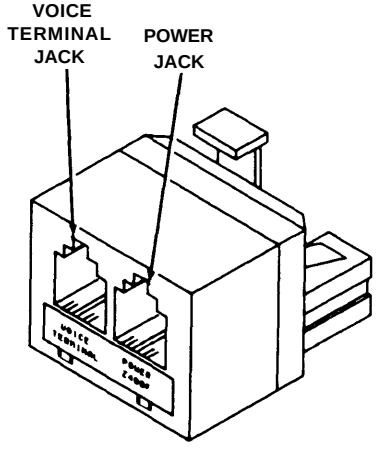

Figure 3

4. Plug one end of the D6AP Cord into the power jack (Figure 3) on the Z400F Adapter. Plug the other end into the output jack on the power supply.

5. Plug the power supply into a 117-volt ac outlet.

   Note: The 117-volt ac outlet should not be controlled by a switch.

(Z111A) FEATURE PACKAGE 2 CARTRIDGE TYPE I (6104)

This Feature Package 2 Cartridge (Figure 1) can be installed in your Communications System Control Unit Models 206, 410, and 820. When installed, custom features can be programmed into your system to expand system capabilities.

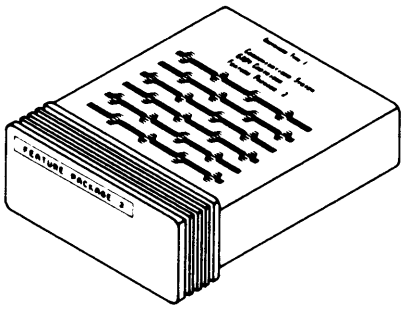

Figure 1

Included in the package with the cartridge are:

- 10 - Feature Package 2 User's Guides
- 1 - Feature Package 2 Administration Manual
- 1 - Switches label for Model 206 (Figure 3)
- 1 - Switches label for Model 410 (Figure 4)
- 2 - Feature Package 2 — Voice Terminal Labels for Intercom Extension 0 (Administrator) (Figure 5)

INSTALLATION

1. Open control unit door.
2. Disconnect control unit power cord from its ac outlet or, on Model 820, set Power Switch to off; and if the auxiliary power supply is installed, disconnect the power cord.

Warning: ***Removing or inserting cartridges in control unit with power on could cause damage to system circuits.***

3. At upper right of control unit (see Figure 2), find Cartridge Type I slot, and, if occupied with a cartridge, remove cartridge; otherwise, remove plastic cover.

   Note: Model 820 has an ejection lever for removing and installing cartridges.

4. Carefully slide the Feature Package 2 Cartridge into Cartridge Type I slot and seat firmly. (On Model 820 close ejector lever.)
5. Reconnect the auxiliary power supply, if applicable (Step 2).
6. Reconnect power cord to ac outlet, or on Model 820, set power switch to ON.

   Note: When power is applied, the red lamp on the control unit should light momentary and go off. The green lamp should light and remain on.

7. For Model 206 or Model 410, get appropriate switch label supplied in cartridge package (Figure 3 or 4) as applicable.

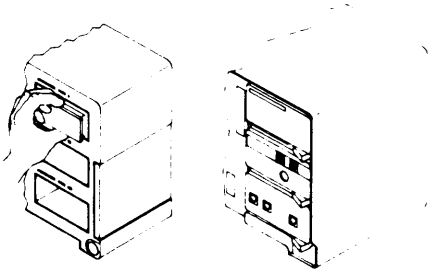

A. MODELS 206/410 **B. MODEL 820**

Figure 2

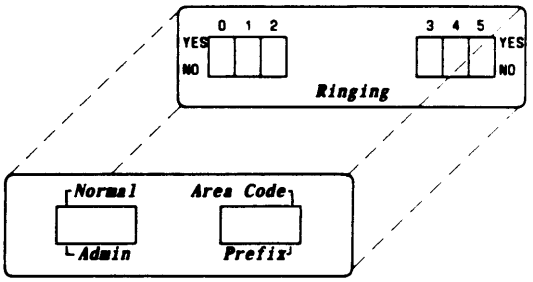

Figure 3. Model 206 Control Unit Switches Label

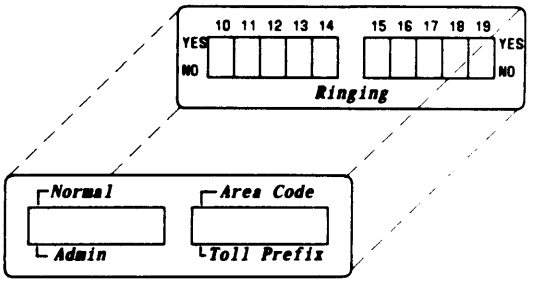

Figure 4. Model 410 Control Unit Switches Label

Equipment Manufactured by AT&T Technologies in U.S.A.

8. Peel off backing and place label around switches as shown in Figure 3 or 4 as applicable. Press firmly to ensure adherence.

   Important: If you have just installed Feature Package 2 for the first time, you should do a system reset to clear memory before programming any of the features.

CLEAR (RESET) FEATURE PACKAGE MEMORY

9. Set control unit in Administration Mode by setting NORMAL/ADMIN switch to ADMIN position.

10. At voice terminal with intercom number 0 (Model 206) and intercom number 10 (Models 410 and 820) set the T/P switch to P (program) position.

11. Dial #01 on this voice terminal.

12. At the control unit, set NORMAL/ADMIN switch to NORMAL position.

13. At voice terminal intercom number 0 (Model 206) or 10 (Models 410 and 820), dial ✻ 99. You will hear two short tones.

14. At the control unit, turn power off, then on.

15. At voice terminal, set T/P switch to center (normal position).

FEATURE PACKAGE MEMORY CLEARED

16. Close control unit door.

   Note: Feature Package 2 User's Guides, Administrator Manual, and the two sets of Feature Package 2 Voice Terminal Labels for Intercom Extension 0 (Administrator) are included with the Feature Package 2. All voice terminal users should be advised that their system is now equipped with Feature Package 2. Their voie terminal should be programmed per instructions in the Feature Package 2 User's Guide and Administration Manual.

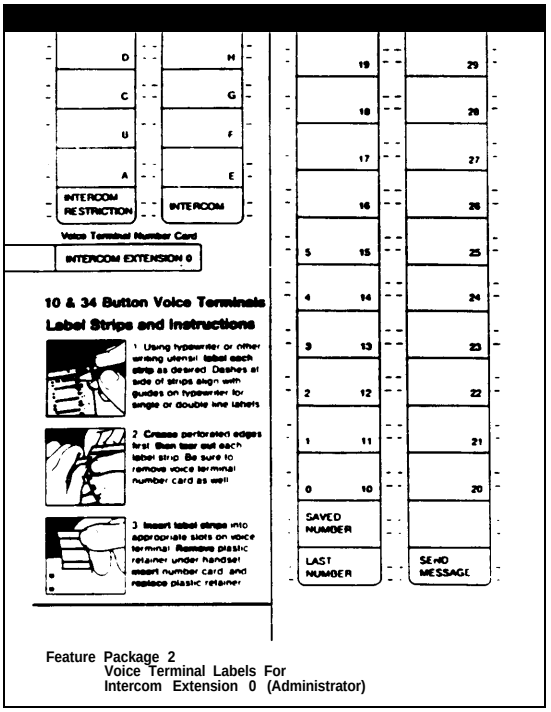

Figure 5. Feature Package 2 Voice Terminal Labels (One-Fourth Actual Size)

Instructions For

(Z111A) FEATURE PACKAGE 2 CARTRIDGE TYPE I (6104)

CIB 3011
ISSUE 1

Copyright © 1984 AT&T Technologies
All rights reserved

(Z201A) 5-VOICE TERMINAL EXPANSION MODULE FOR MODEL 820 (61218)

The 5-Voice Terminal Expansion Module (Figure 1), when installed in a Model 820 control unit, permits connection of five additional voice terminals to the system.

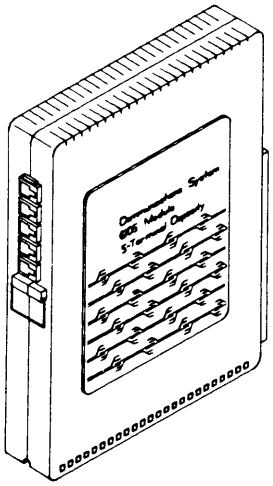

Figure 1

INSTALLATION

1. Open and remove control unit door (Figure 2)
2. On the control unit, set the power switch to OFF and if the auxiliary power cord is connected, disconnect it from ac outlet.

   Warning: ***Installing or removing modules from control unit <u>with power on</u> could cause damage to equipment.***

3. At the leftmost empty module slot, release locking tab (Figure 3), pull, and lower faceplate to the horizontal position.
4. Slide the 5-voice terminal expansion module (Figure 4) into mounting slot until it is properly seated. (Do Not Use Excessive Force.)
5. Close and latch faceplate.
6. Reconnect auxiliary power supply, if applicable (Step 2).
7. Turn the control unit power switch to ON. (When power is applied to the control unit, the red warning lamp should light momentarily and go off. The green lamp should come on and stay on.)
8. If voice terminals are to be connected at this time, follow instructions in Model 820 Installation Manual.

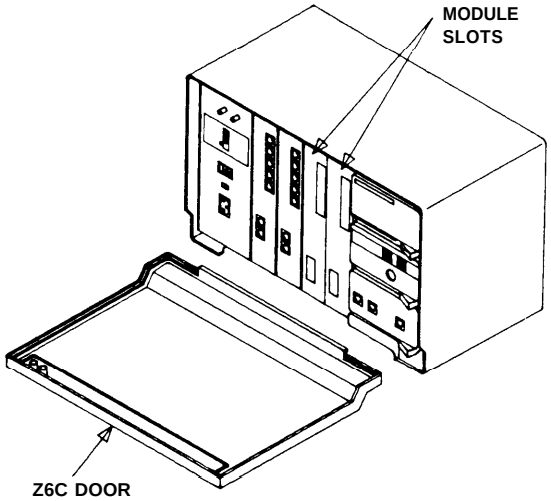

Figure 2

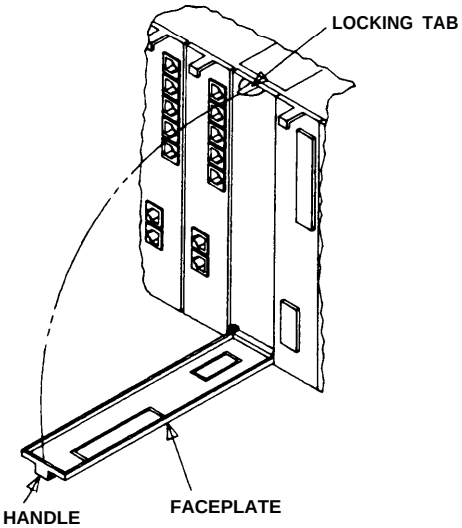

Figure 3

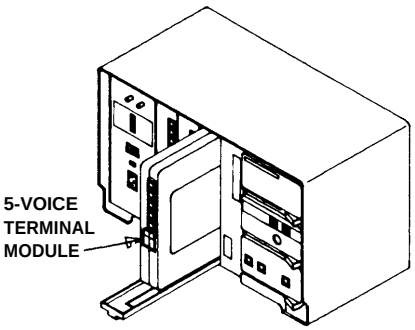

Figure 4

Equipment manufactured by AT&T Technologies in U.S.A.

CIB 3029

Z110B MODEL 206 CONTROL UNIT INSTALLATION KIT (PEC 6106)

This kit contains items needed to install your Model 206 control unit. Instructions for using the wall mounting kit are included here; instructions for using other items are included in your *Installation Guide: Models 206 and 410.* You may not use all these items during your initial installation. Save unused items in the storage box provided for later changes or growth in your system. This kit includes:

- **Storage box** for storing your unused items
- **Wall mounting kit** for wall mounting your control unit. (If your kit contains a black plastic backplate, refer to the instructions on page 3, Side A. If your kit contains three aluminum brackets, refer to the instructions on page 3, Side B.)
- **Two line cords** for connecting your network interface jacks to the control unit jacks or jack field

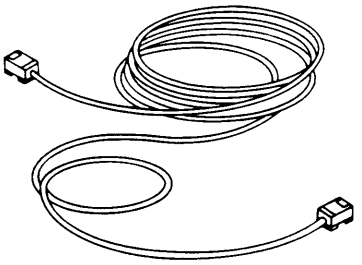

- **One 2-Line Adapter** for connecting your two line cords to a single network interface (RJ14C) where two outside telephone lines enter the premises

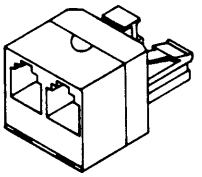

L1	L1
L2	L2
L3	L3
L4	L4
L8	L8
Network Interface	Jack Field

Telephone Number Labels

Please Use Pencil On Labels
Please Don't Discard

- **Telephone number label pairs** for identifying your outside line telephone numbers at the network interface or jack field

LINE CORD LABELS

A	A	B	B	C	C	D	D	E	E	F	F	G	G	H	H
A	A	B	B	C	C	D	D	E	E	F	F	G	G	H	H
A	A	B	B	C	C	D	D	E	E	F	F	G	G	H	H
A	A	B	B	C	C	D	D	E	E	F	F	G	G	H	H
A	A	B	B	C	C	D	D	E	E	F	F	G	G	H	H
A	A	B	B	C	C	D	D	E	E	F	F	G	G	H	H
A	A	B	B	C	C	D	D	E	E	F	F	G	G	H	H
A	A	B	B	C	C	D	D	E	E	F	F	G	G	H	H
A	A	B	B	C	C	D	D	E	E	F	F	G	G	H	H
A	A	B	B	C	C	D	D	E	E	F	F	G	G	H	H
A	A	B	B	C	C	D	D	E	E	F	F	G	G	H	H
A	A	B	B	C	C	D	D	E	E	F	F	G	G	H	H

Please Don't Discard

- **Line cord letter pairs** for labeling your line cords

W1	W1
W2	W2
W3	W3
W4	W4
W24	W24
Jack Field	Terminal Side

Wiring Run Labels

Please Use Pencil On Labels
Please Don't Discard

TERMINAL CORD LABELS

0	0	1	1	2	2	3	3	4	4	5	5
0	0	1	1	2	2	3	3	4	4	5	5
0	0	1	1	2	2	3	3	4	4	5	5
0	0	1	1	2	2	3	3	4	4	5	5
0	0	1	1	2	2	3	3	4	4	5	5
0	0	1	1	2	2	3	3	4	4	5	5
0	0	1	1	2	2	3	3	4	4	5	5
0	0	1	1	2	2	3	3	4	4	5	5
0	0	1	1	2	2	3	3	4	4	5	5
0	0	1	1	2	2	3	3	4	4	5	5
0	0	1	1	2	2	3	3	4	4	5	5
0	0	1	1	2	2	3	3	4	4	5	5

Please Don't Discard

- **Wiring run label pairs** for identifying each end of the wiring run between the control unit or jack field and the voice terminal location

- **Terminal cord label pairs** for identifying intercom numbers at the control unit and voice terminals

SYSTEM DIRECTORY — MODEL 206

OUTSIDE LINE NUMBERS:

Line B _____

Line A _____

OPTION SWITCHES

FP2		FP1	BASIC
☐ ADMIN	☐ NORMAL	☐ ☐	☐ ☐
		☐ ☐	☐ ☐
ADMIN		☐ ☐	☐ ☐
☐ PREFIX	☐ AREA CODE	☐ ☐	☐ ☐
		☐ ☐	☐ ☐
☐ TOLL	☐	☐ ☐	☐ ☐
		NO YES	NO YES
		OUTWARD CALLS	RINGING

☐ TONE ☐ PULSE
Telephone Lines

INTERCOM NUMBER	PERSON OR LOCATION	WIRING RUN
0		W
1		W
2		W
3		W
4		W
5		W

Please Use Pencil

- **Adhesive-backed system directory label** for you to fill out with essential system and user information and then attach to the inside of the control unit door

SIDE A USING THE WALL MOUNTING KIT WITH THE PLASTIC MOUNTING BRACKET

NOTE: The instructions below pertain to you if your kit contains a plastic mounting bracket. If your wall mounting kit contains three aluminum brackets, please refer to the instructions on Side B.

Choose the location for your control unit according to the instructions in your *Installation Guide: Models 206 and 410.* To mount your control unit on the wall, follow these instructions:

1. Make sure your mounting location is as large as the paper template included with the black mounting bracket (Figure 1). The control unit is the size of the template; the mounting bracket is smaller, as indicated by the dotted lines on the template.

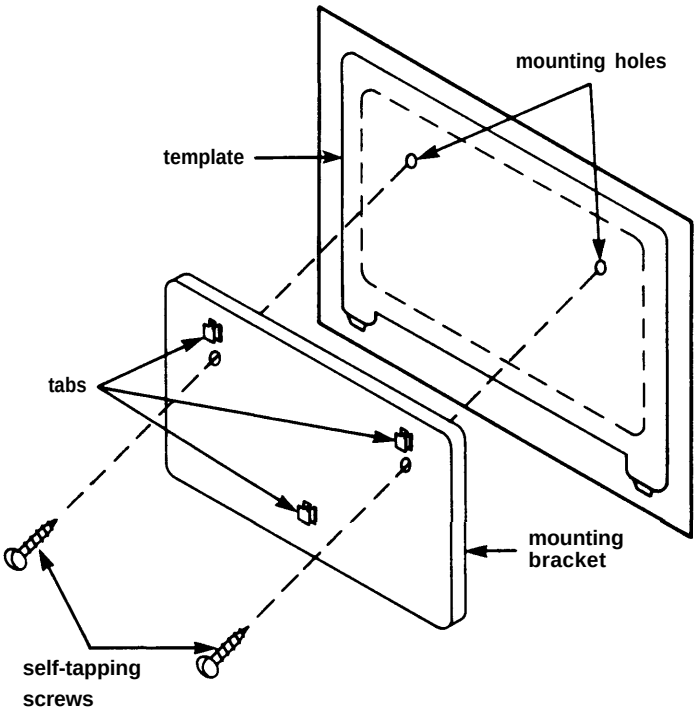

Figure 1

2. Hold the template up to the location, making sure the template is level. Mark where the two mounting holes should go, using either a pencil or a sharp object. You may then discard the template.
3. If you are mounting the bracket on plywood or sheet metal, drill two 9/64-inch holes. For plasterboard or wood paneling, drill two 3/16-inch holes.
4. Position the bracket over the holes and insert the self-tapping screws.
5. Tighten the screws to securely attach the mounting bracket to the surface.
6. Position the control unit against the mounting bracket so the tabs on the mounting bracket fit into the slots in the back of the control unit.
7. Gently slide the control unit straight down so the tabs fit into the top part of the slots.

SIDE B USING THE WALL MOUNTING KIT WITH THE ALUMINUM BRACKETS

NOTE: The instructions below pertain to you if your kit contains three aluminum brackets. If your wall mounting kit contains a black plastic backplate, please refer to the instructions on Side A.

Choose the location for your control unit according to the instructions in your *Installation Guide: Models 206 and 410.* To mount your control unit on the wall, follow these instructions:

1. Make sure your mounting location is as large as the paper template included with the three aluminum mounting brackets (Figure 1).

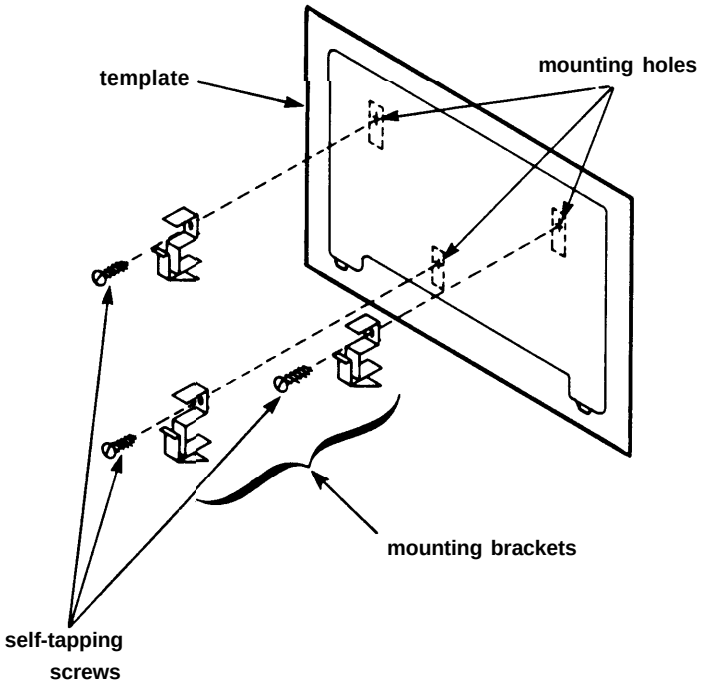

Figure 1

2. Hold the template up to the location, making sure the template is level. Mark where the three mounting holes should go, using either a pencil or a sharp object. You may then discard the template.
3. If you are mounting the brackets on plywood or sheet metal, drill three 9/64-inch holes. The aluminum brackets will also work with 3/16-inch toggle bolts on dry walls and #8 masonry anchors on concrete. (These may be purchased from a hardware store.)
4. Position the brackets over the holes and insert the self-tapping screws.
5. Tighten the screws to securely attach the aluminum brackets to the surface.
6. Position the control unit against the three mounting brackets so the hooks on the mounting brackets fit into the three slots in the back of the control unit.
7. Gently slide the control unit straight down so the hooks fit into the top part of the slots.

TEMPLATE FOR USE WITH THE PLASTIC MOUNTING BRACKET

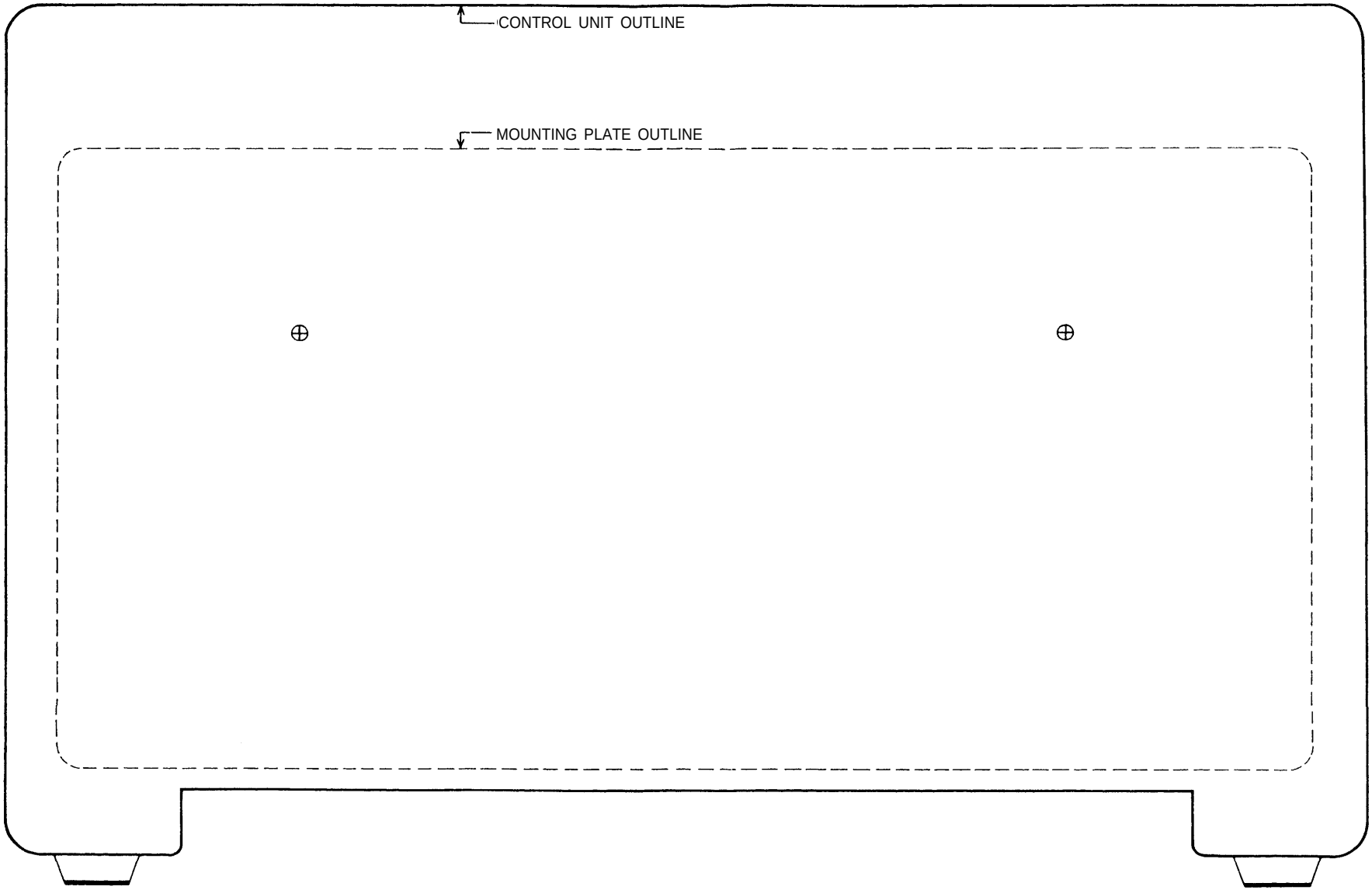

TEMPLATE FOR USE WITH ALUMINUM BRACKETS

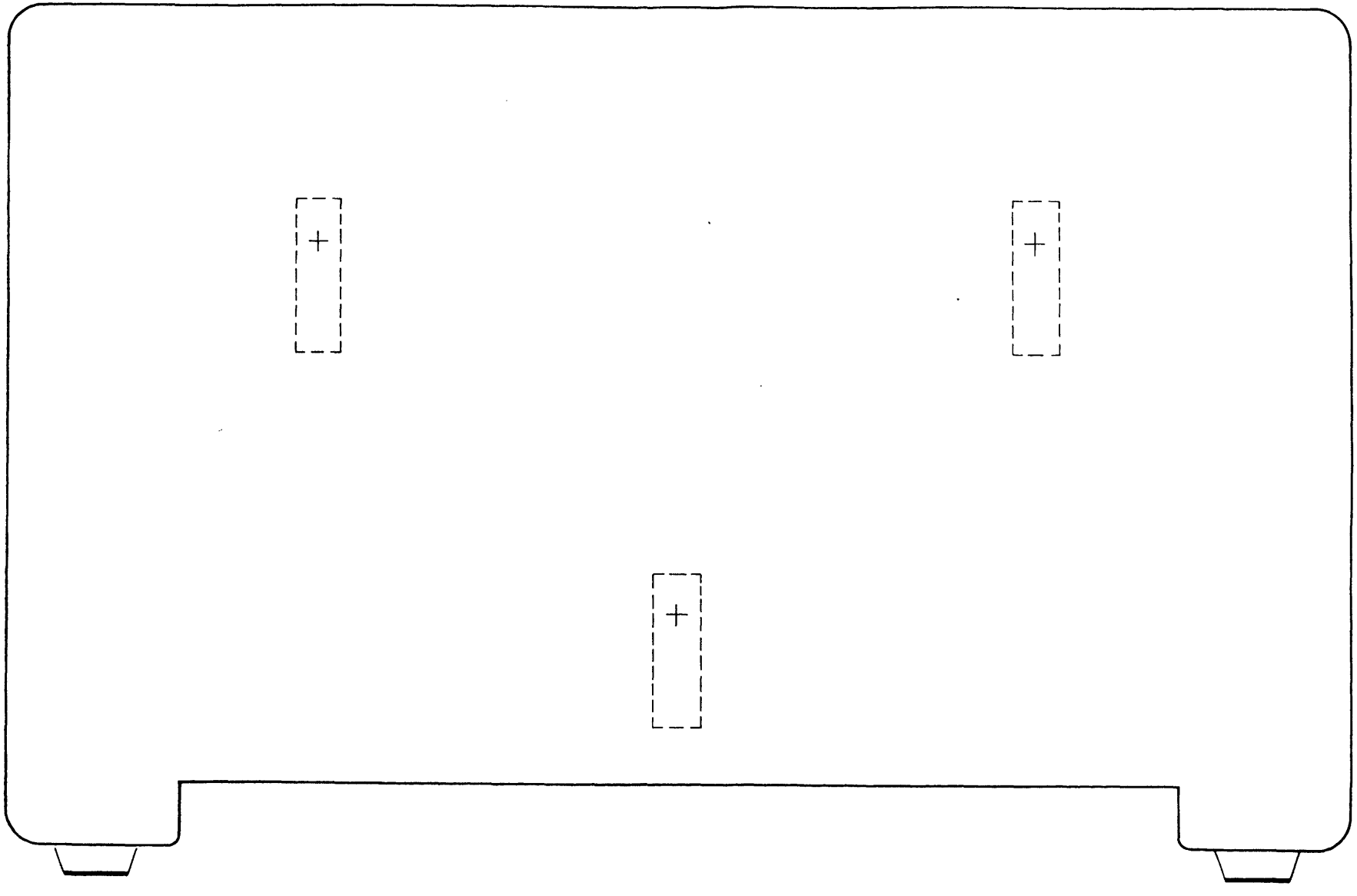

CIB 3030

Z110C MODEL 410 CONTROL UNIT INSTALLATION KIT (PEC 6110)

This kit contains items needed to install your Model 410 control unit. Instructions for using the wall mounting kit are included here; instructions for using other items are included in your *Installation Guide: Models 206 and 410.* You may not use all these items during your initial installation. Save unused items in the storage box provided for later changes or growth in your system. This kit includes:

- **Storage box** for storing your unused items
- **Wall mounting kit** for wall mounting your control unit. (If your kit contains a black plastic backplate, refer to the instructions on page 3, Side A. If your kit contains the three aluminum brackets, refer to the instruction on page 3, Side B.)
- **Four line cords** for connecting your network interface jacks to the control unit jacks or jack field

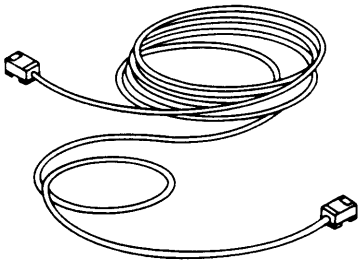

- **Two 2-Line Adapters** for connecting your four line cords to two network interfaces (RJ14C) where four outside telephone lines enter the premises

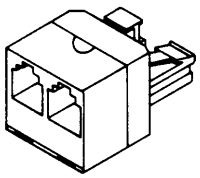

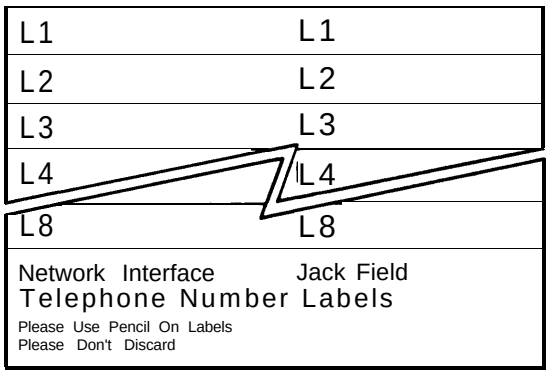

L1	L1
L2	L2
L3	L3
L4	L4
L8	L8
Network Interface	Jack Field

Telephone Number Labels

Please Use Pencil On Labels
Please Don't Discard

- **Telephone number label pairs** for identifying your outside line telephone numbers at the network interface or jack field

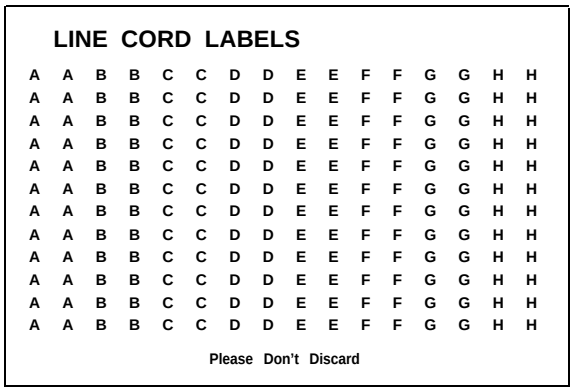

LINE CORD LABELS

A	A	B	B	C	C	D	D	E	E	F	F	G	G	H	H
A	A	B	B	C	C	D	D	E	E	F	F	G	G	H	H
A	A	B	B	C	C	D	D	E	E	F	F	G	G	H	H
A	A	B	B	C	C	D	D	E	E	F	F	G	G	H	H
A	A	B	B	C	C	D	D	E	E	F	F	G	G	H	H
A	A	B	B	C	C	D	D	E	E	F	F	G	G	H	H
A	A	B	B	C	C	D	D	E	E	F	F	G	G	H	H
A	A	B	B	C	C	D	D	E	E	F	F	G	G	H	H
A	A	B	B	C	C	D	D	E	E	F	F	G	G	H	H
A	A	B	B	C	C	D	D	E	E	F	F	G	G	H	H
A	A	B	B	C	C	D	D	E	E	F	F	G	G	H	H

Please Don't Discard

- **Line cord letter pairs** for labeling your line cords

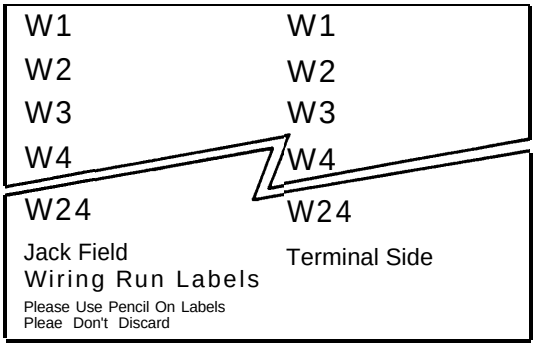

- **Wiring run label pairs** for identifying each end of the wiring run between the control unit or jack field and the voice terminal location

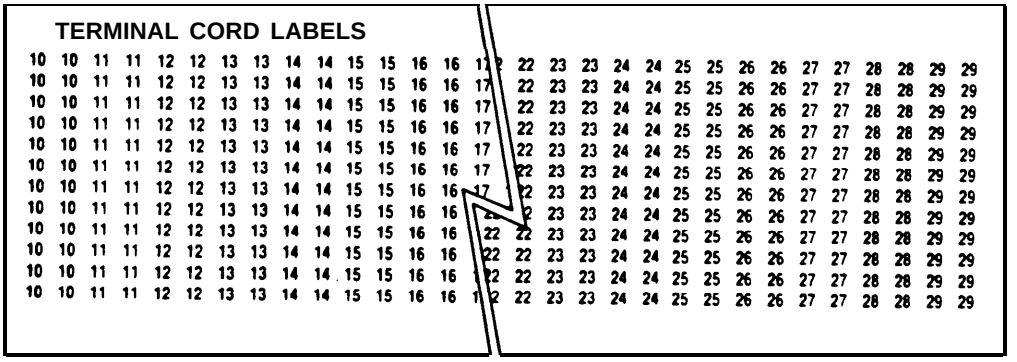

- **Terminal cord label pairs** for identifying intercom numbers at the control unit and voice terminals

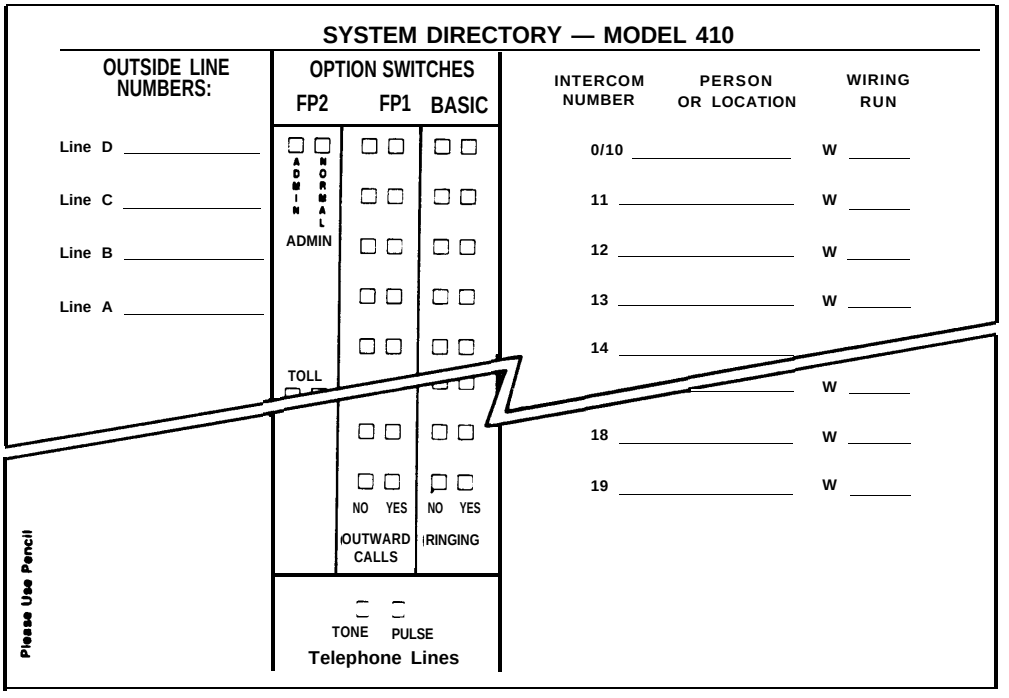

- **Adhesive-backed system directory label** for you to fill out with essential system and user information and then attach to the inside of the control unit door

SIDE A USING THE WALL MOUNTING KIT WITH THE PLASTIC MOUNTING BRACKET

NOTE: The instructions below pertain to you if your kit contains a plastic mounting bracket. If your wall mounting kit contains three aluminum brackets, please refer to the instructions on Side B.

Choose the location for your control unit according to the instructions in your *Installation Guide: Models 206 and 410.* To mount your control unit on the wall, follow these instructions:

1. Make sure your mounting location is as large as the paper template included with the black mounting bracket (Figure 1). The control unit is the size of the template; the mounting bracket is smaller, as indicated by the dotted lines on the template.

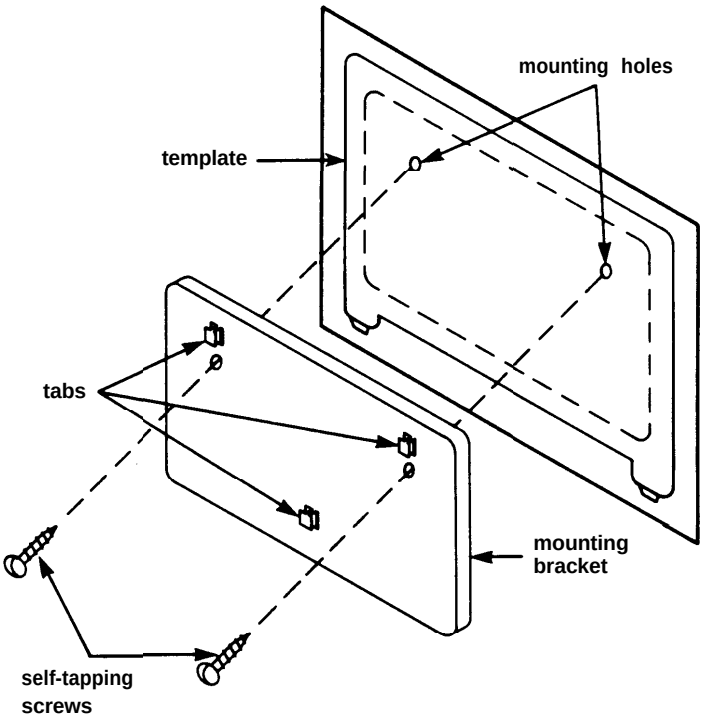

Figure 1

2. Hold the template up to the location, making sure the template is level. Mark where the two mounting holes should go, using either a pencil or a sharp object. You may then discard the template.
3. If you are mounting the bracket on plywood or sheet metal, drill two 9/64-inch holes. For plasterboard or wood paneling, drill two 3/16-inch holes.
4. Position the bracket over the holes and insert the self-tapping screws.
5. Tighten the screws to securely attach the mounting bracket to the surface.
6. Position the control unit against the mounting bracket so the tabs on the mounting bracket fit into the slots in the back of the control unit.
7. Gently slide the control unit straight down so the tabs fit into the top part of the slots.

SIDE B USING THE WALL MOUNTING KIT WITH THE ALUMINUM BRACKETS

NOTE: The instructions below pertain to you if your kit contains three aluminum brackets. If your wall mounting kit contains a black plastic backplate, please refer to the instructions on Side A.

Choose the location for your control unit according to the instructions in your *Installation Guide: Models 206 and 410.* To mount your control unit on the wall, follow these instructions:

1. Make sure your mounting location is as large as the paper template included with the three aluminum mounting brackets (Figure 1).

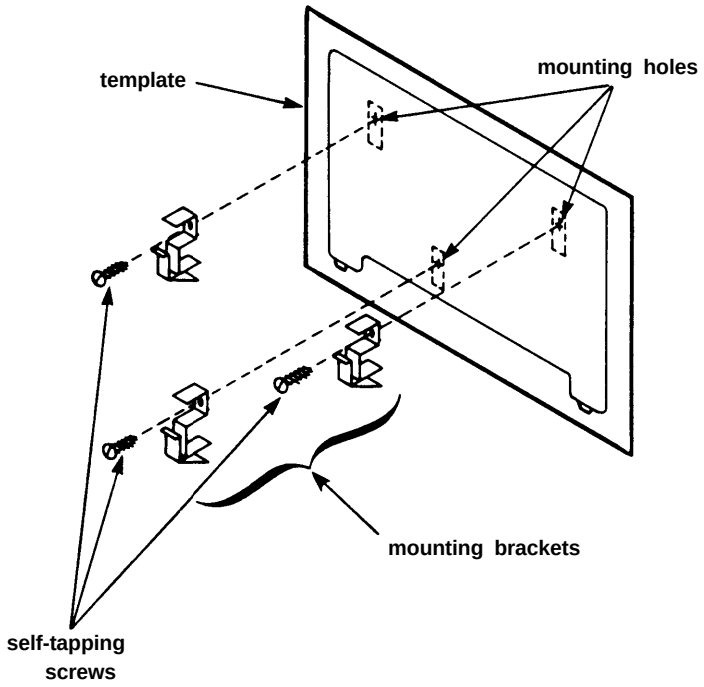

Figure 1

2. Hold the template up to the location, making sure the template is level. Mark where the three mounting holes should go, using either a pencil or a sharp object. You may then discard the template.
3. If you are mounting the brackets on plywood or sheet metal, drill three 9/64-inch holes. The aluminum brackets will also work with 3/16-inch toggle bolts on dry walls and #8 masonry anchors on concrete. (These may be purchased from a hardware store.)
4. Position the brackets over the holes and insert the self-tapping screws.
5. Tighten the screws to securely attach the aluminum brackets to the surface.
6. Position the control unit against the three mounting brackets so the hooks on the mounting brackets fit into the three slots in the back of the control unit.
7. Gently slide the control unit straight down so the hooks fit into the top part of the slots.

TEMPLATE FOR USE WITH ALUMINUM BRACKETS

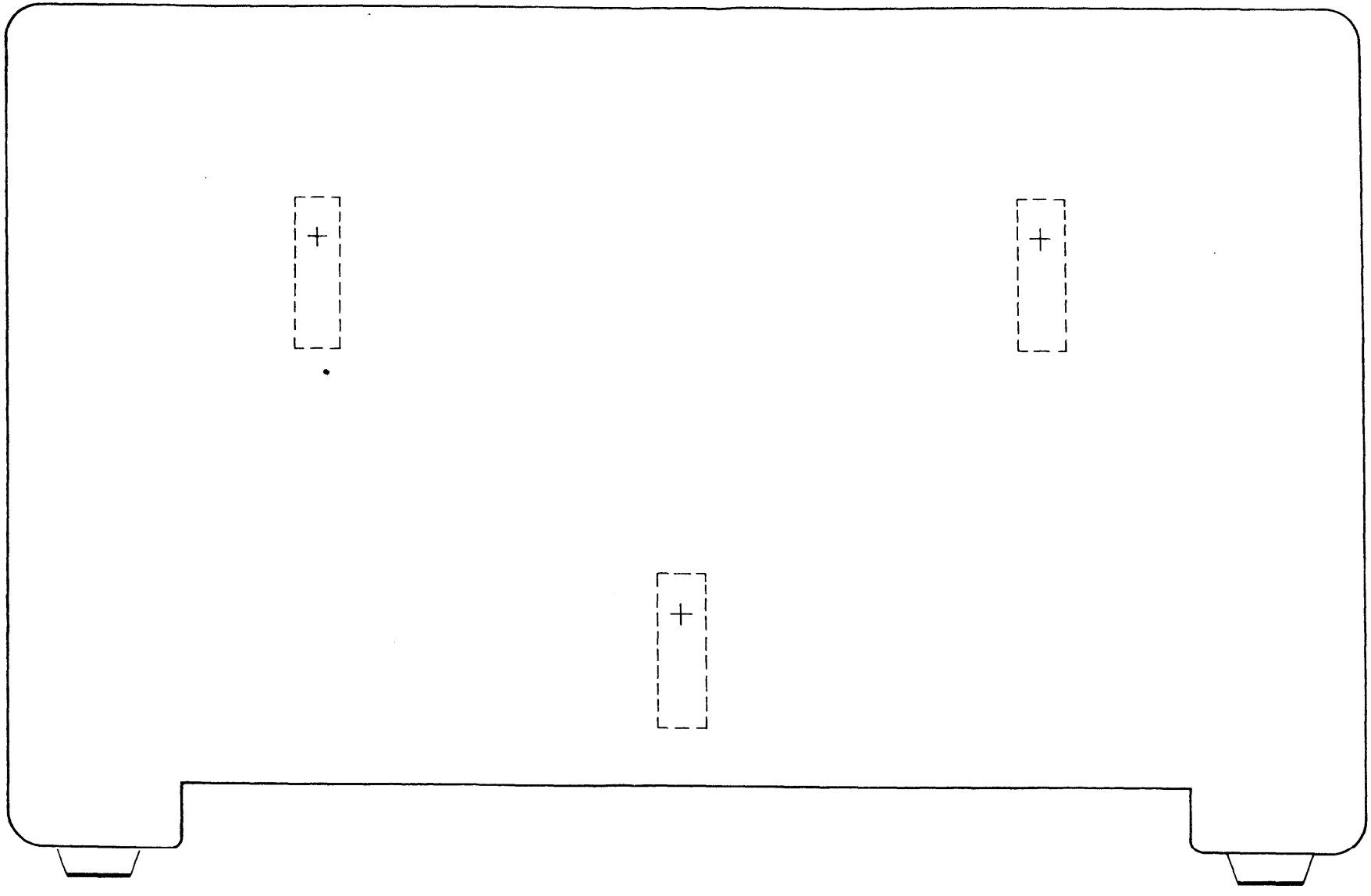

TEMPLATE FOR USE WITH THE PLASTIC MOUNTING BRACKET

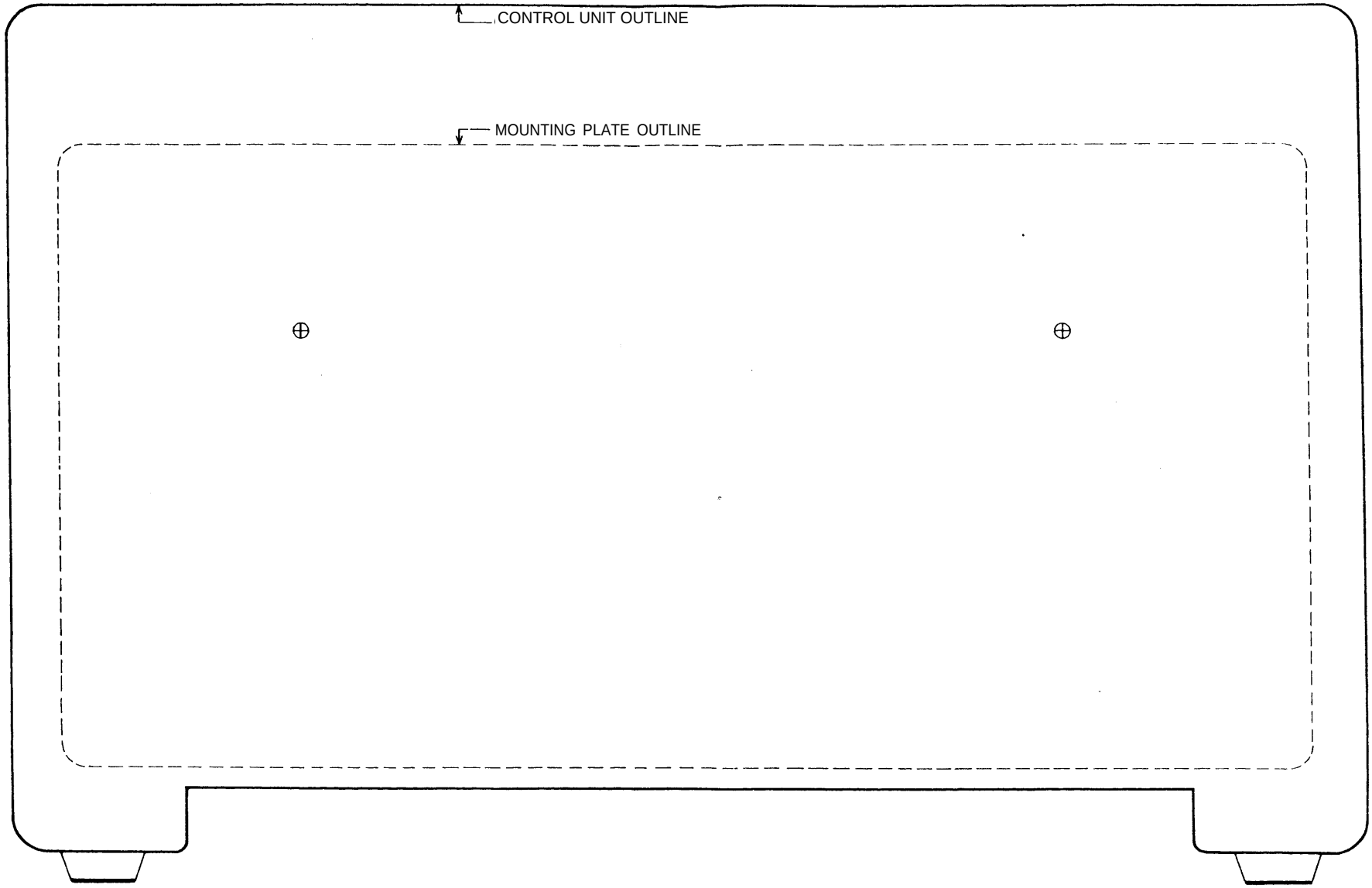

CIB 3038

Z609A 4-WAY MODJACK ADAPTER

Description

The 4-Way Modjack Adapter consists of one 4-pair modjack and four 1-pair modjacks attached to a printed circuit board.

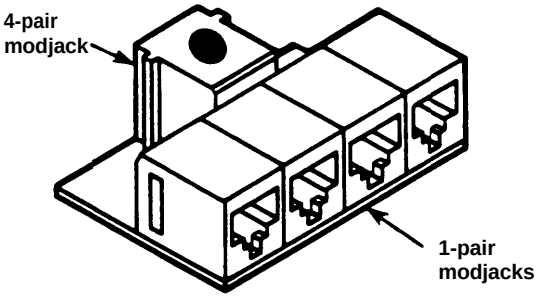

4-Way Modjack Adapter

The adapter fits into a jack panel box as shown below. Wiring runs for four power failure transfer telephones (PFTTs) or four extra alerts can be connected to the four 1-pair modjacks. One end of a jumper cord is connected to the 4-pair modjack. The other end of the jumper cord is connected to the PFTT or EXTRA ALERT jack in the Feature Cartridge or Feature Module in the control unit.

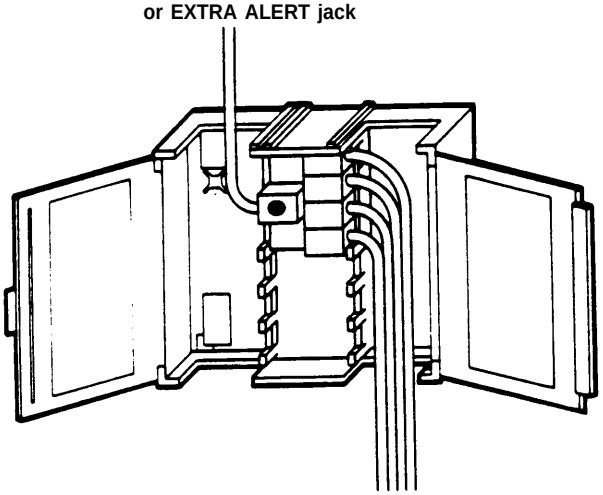

Installation Instructions

1. In the jackfield, find a jack panel box with a yellow dot (for auxiliary equipment adapters).

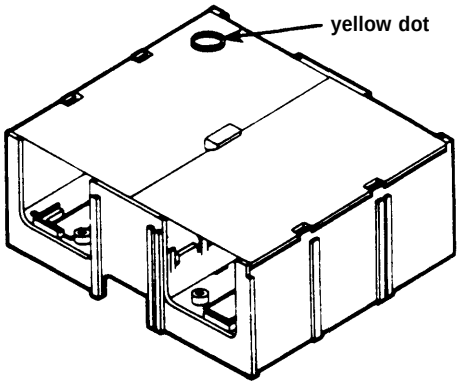

2. The 4-Way Modjack Adapter requires three jack retainer positions in the jack panel box. To make room, remove the second and third pairs of retainer prongs from the top *or* bottom of the box. With your fingers or pliers, bend the prongs back and forth until they break.

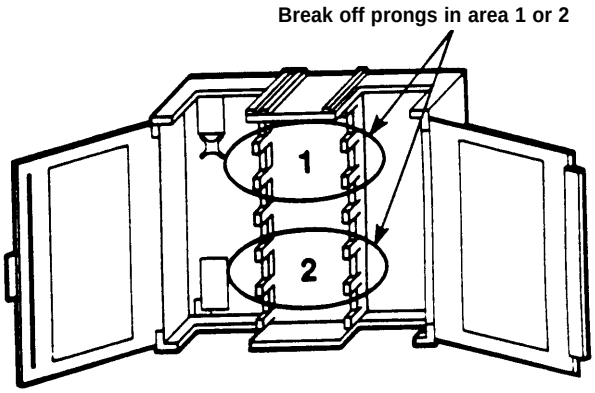

Continued on other side

3. Snap in the adapter so the black dot is on the side with the door handle.

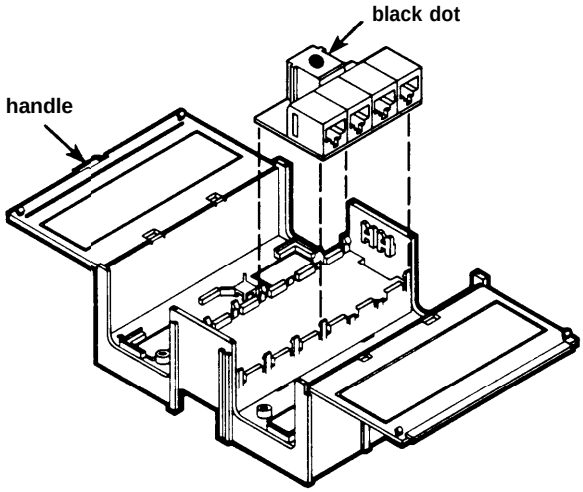

4. Connect wiring to the adapter according to the instructions in *CIB 3006: Wiring Installation Instructions.*

Instructions For
Z609A 4-Way Modjack Adapter

CIB 3038
ISSUE 1

Copyright (c) 1984 AT&T.
PRINTED IN USA.

Index

NOTE: Pages within the individual trouble sections are numbered in an unusual way to make this manual easy to update. In page number A1-4, for instance, the A indicates the section—"A. Trouble on One Telephone." The 1 indicates the first trouble category within that section—Ringing. The 4 indicates the fourth page of ringing symptoms.

Refer to the letters and numbers on the tab dividers for help in finding page numbers listed in the index.

A

AC power hookup, B7-3

Accessory symptoms (trouble on one telephone)
lights behave abnormally on 34-button
voice terminal with Hands-Free Unit, A6-3

Accessory symptoms (trouble on several telephones)
Music-on-Hold, Background Music, and/or
Loudspeaker Paging are too loud or too soft, B6-3

Adapters
Acoustic Coupler Adapter, CIB 2903, CIB 2923
4-Way Modjack Adapter, CIB 3038
Headset Adapter, 16, CIB 2867
Line Bridging Adapter Kit, CIB 2888
Manual Multipurpose Adapter, 17
Modular Extension Adapter, CIB 2861
2-Line Adapter, CIB 2863

Auxiliary Power Unit, 19, B7-3, CIB 2866

C

Cartridges
Type I (feature packages), 10, CIB 2869
Type II (audio options), 11, CIBs 2870, 2871
Type III (line-associated options), 12, CIB 2872

CIBs *(listed in numerical order behind CIBs tab divider)*

2852: (7302 H01) 5-Button Voice Terminal (3160)

2853: (7303 H01) 10-Button Voice Terminal (3161)

2854: (10A) 5- and 10-Button Voice Terminal Fixed Desk Stand (32004)

2855: (11A) 10-Button Voice Terminal Adjustable Desk Stand (32002)

2856: (201A) 10-Button Voice Terminal Wall Mount (32001)

2858: (103A Connecting Block) Customer-Installable Jack (32601)

2859: (742D) Connecting Block

2860: (700A8) Modular Plug

2861: (451A) Modular Extension Adapter

2863: (267C) 2-Line Adapter (61400)

2864: (S102A) Hands-Free Unit (3163)

2865: (7305 H01) 34-Button Voice Terminal (3162)

2866: (335A) Auxiliary Power Unit (3165)

2867: (502A) Headset Adapter (3164)

2870: (150A) Music-on-Hold Cartridge Type II (6101)

2871: (151A) Music-on-Hold/Paging Cartridge Type II (6102)

2872: (170A) Extra-Alert/2-Line Power Failure Cartridge Type III (6103)

2885: (14A) 5-Button Voice Terminal Fixed Desk Stand and Wall Mount (32000)

2886: (11C) 34-Button Voice Terminal Adjustable Desk Stand (32003)

2887: (203A) 34-Button Voice Terminal Wall Mount (32006)

2888: (267A2) Line Bridging Adapter Kit (61401)

2893: (452A-50) Extra-Alert Control Switch (32630)

2903: (349A) Acoustic Coupler Adapter

2923: (346A) Acoustic Coupler Adapter (31710)

2924: (D181233) Line-Powered Extra Alert Ringer and Parts (61211A)

3000: (7305 H02) 34-Button Deluxe Voice Terminal (3166)

3002: (Z200A) 2-Line/5-Voice Terminal Module for Model 820 (6129)

3004: (Z110A) Model 820 Control Unit Installation Kit (6120)

3006: Wiring Installation Instructions

3007: (D181282) Adjunct Power Supply for 34-Button Deluxe Voice Terminal (32811)

3011: (Z111A) Feature Package 2 Cartridge Type I (6104)

3012: (Z201A) 5-Voice Terminal Module for Model 820 (6105)

3029: (Z110B) Model 206 Control Unit Installation Kit (6106)

3030: (Z110C) Model 410 Control Unit Installation Kit (6110)

3038: (Z609A) 4-Way Modjack Adapter

Control unit accessories
Extra Alerts, 18
Auxiliary Power Unit, 19, CIB 2866

Control units
Model 206, 6 — 7
Model 410, 6 — 7
Model 820, 8 — 9

D

Dialing symptoms (trouble on one telephone)
off-premises telephone has no dial tone and cannot receive calls, A2-6
user cannot program alternate long-distance or other computer-based services on Outside Auto Dial buttons, A2-3
user hears dial tone but cannot dial out, A2-3
user lifts handset and does not hear dial tone, A2-4
user with off-premises telephone hears intercom dial tone but cannot place an outside call, A2-5
when trying to access Centrex, PBX, or custom calling features, dialing # and a 2-digit feature code does not work, A2-5

Dialing symptoms (trouble on several telephones)
dial tone is not present on a particular line but is heard on other lines, B2-3
dial tone is present on all lines, but users cannot dial out on all lines, B2-4

E

Entire system down (trouble on several telephones)
entire system is down, B7-3
green Power light on the control unit is off, but there is no power failure, B7-4

Extra alerts,
Extra-Alert Control Switch, 18, CIB 2893
Extra-Alert/2-Line Power Failure Transfer cartridge, 12
Line-Powered Extra Alert Ringer and Part, CIB 2924

F

Facsimile machine, 17

Feature packages, 10, CIB 2869

Feature symptoms (trouble on one telephone)
administrator cannot restrict outside calls at a voice terminal or basic telephone, A5-6
call cannot be conference, A5-4
intercom calls to a 5- or 10-button voice terminal get a busy signal but the user is not on another line, A5-7
user can dial out normally from dial pad but Outside Auto Dial button does not work, A5-3
user attempts to retrieve a held call and loses it, A5-4
toll call restricted voice terminal is unable to make a local call, A5-5
user receives voice signal for a transferred call but gets a different call after lifting the handset (applies only to Model 410), A5-7
user with an off-premises telephone cannot put a call on hold, A5-9
voice terminal speaker squeals when user hangs up handset, A5-3
voice terminal receives calls transferred to it with intercom voice announcement as transfer rings (applies only to certain feature cartridges), A5-8
voice terminal more than 200 feet from a Model 206 control unit does not operate properly, A5-8

Feature symptoms (trouble on several telephones)
Last Number Redial and Saved Number Redial features do not work, B5-3
Outside Auto Dial feature does not work, B5-4
user cannot pick up a call transferred from another user, B5-3

Functional overview, 3

H

Hands-Free Unit, 15, CIB 2864

Hearing symptoms (trouble on one telephone)
outside caller intermittently has trouble hearing a user, A3-5
user hears excessive breath noises from himself or herself, A3-3
user in a noisy room has trouble hearing outside or intercom calls, A3-3
user with off-premises telephone has trouble hearing, A3-4

Hearing symptoms (trouble on several telephones)
users cannot hear outside party clearly, B3-3

I

Installation instructions for components. *See* CIBs

Intercom
intercom auto dial problem. *See* Auto Dial feature
intercom call problem. *See* Calls

L

Light symptoms (trouble on one telephone)
voice terminal behaves abnormally in the test mode, A4-3

Light symptoms (trouble on several telephones)
control unit red Warning light flutters and feature cartridge is in place, B4-4
voice terminal lights are dim, especially when the voice terminal is in test mode, B4-3
voice terminal red and green lights do not flash alternately in test mode, B4-4

Line designations
Model 206, 6
Model 410, 6
Model 820, 8

Line/voice terminal modules, 12, CIBs 3002, 3012, 3027

M

Manual Multipurpose Adapter, 17, CIB 3008

MERLIN communications system
functional overview, 3
system overview, 4

Miscellaneous symptoms (trouble on one telephone)
outside lines added to the system do not appear at the attendant position, A7-3
outside lines taken away from the system still appear at the attendant position, A7-3
voice terminal or voice terminal accessory suddenly fails, A7-4

Miscellaneous symptoms (trouble on several telephones)
MERLIN system interferes with television reception, B8-4
outside call is dropped during conversation, B8-3

Modular plug, CIB 2860

Modules
line/voice terminal modules, 12
Off-Premises Telephone Interface, 13, CIB 3009

Music-on-Hold Cartridge, 11, CIB 2870
Music-on-Hold/Paging Cartridge, 11, CIB 2871

O

Off-premises telephone
Off-Premises Telephone Interface, 13, CIB 3009
Off-premises telephone has no dial tone and cannot receive calls, A2-6
Off-premises telephone rings after user hangs up, A1-5
user with off-premises telephone cannot put a call on hold, A5-9
user with off-premises telephone has trouble hearing, A3-4
user with off-premises telephone hears intercom dial tone but cannot place an outside call, A2-5

Outside Auto Dial feature
Outside Auto Dial feature does not work, B5-4
user can dial out normally from dial pad but Outside Auto Dial button does not work, A5-3
user cannot program alternate long-distance or other computer-based services on Outside Auto Dial buttons, A2-3

Outside lines, 4

R

Ringing symptoms (trouble on one telephone)
line rings but no caller is on the line, A1-3
off-premises telephone rings after user hangs up, A1-5
10-button voice terminals exhibit peculiar ringing and/or extra lights are lit, A1-3
voice terminal does not ring on incoming outside calls, A1-6
voice terminal does not ring when a call is transferred to it, A1-5
voice terminal rings constantly, whether on or off hook, A1-4

Ringing symptoms (trouble on several telephones)
particular outside line does not ring, B1-3
voice terminals have a peculiar ring, lights flash randomly, and users often hear clicks through the handset, B1-5

S

Symptoms of trouble (on one telephone)
accessory symptoms, A6
dialing symptoms, A2
feature symptoms, A5
hearing symptoms, A3
light symptoms, A4
miscellaneous symptoms, A7
ringing symptoms, A1

Symptoms of trouble (on several telephones)
accessory symptoms, B6
dialing symptoms, B2
entire system down symptoms, B7
feature symptoms, B5
hearing symptoms, B3
light symptoms, B4
miscellaneous symptoms, B8
ringing symptoms, B1

T

Telephones
backup telephones, 12
cordless telephones, 17
Power Failure Transfer Telephones, 12
voice terminal. *See* Voice terminal

Troubles. *See* Symptoms *or symptom categories* (Ringing, Dialing, Lights, etc.)

V

Voice terminal
5-Button Voice Terminal, 14, CIB 2852
10-Button Voice Terminal, 14, CIB 2853
34-Button Deluxe Voice Terminal, 14, CIB 3000
34-Button Voice Terminal, 14, CIB 2865
Voice Terminal Power Supply, 16
voice terminal problems. *See* Symptom *or symptom categories* (Ringing, Dialing, Lights, etc.)

Voice terminal accessories
Hands-Free Unit, 15, CIB 2864
Headset Adapter, 16, CIB 2867
Manual Multipurpose Adapter, 17, CIB 3008
Voice Terminal Power Supply, 16, CIB 3007